TEAR SHEET

Darlana Mini Lantern
Item # CHC 2175AI

Designer: Chapman & Myers

Height: 14"
Width: 9.75"
Canopy: 5.5" Round
Finishes: AI, GI, PN
Socket: 3 - E12 Candelabra
Wattage: 3 - 60 C11
Weight: 7 Pounds
©EFC DESIGNS

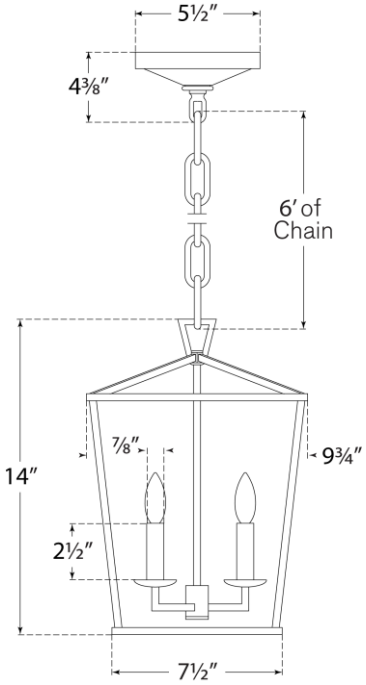

VISUAL COMFORT