TEAR SHEET

Lotura 21" Sconce
Item # KW 2444MWH

Designer: Kelly Wearstler

Height: 21"
Width: 4.5"
Extension: 4"
Backplate: 4.5" Square
Finishes: MBL, MGD, MWH
Lightsource: Dedicated LED
Wattage: 10w (1200lm)
Weight: 6 Pounds
Note: UL Only

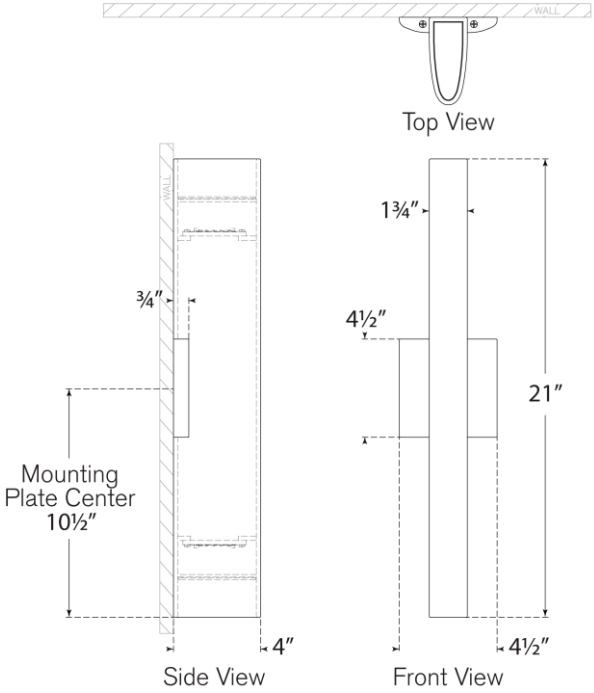

VISUAL COMFORT & CO.

DAMP LED 4