TEAR SHEET

Brassica Large Chandelier

Item # KW 5645PW

Designer: Kelly Wearstler

O/A Height: 67.75"
Fixture Height: 24.5"
Min. Custom Height: 32"
Width: 36"
Canopy: 5.5" Round
Finishes: AI, PW
Socket: Dedicated LED
Wattage: 25w (2000lm)
Note: UL Only | Custom Height Available

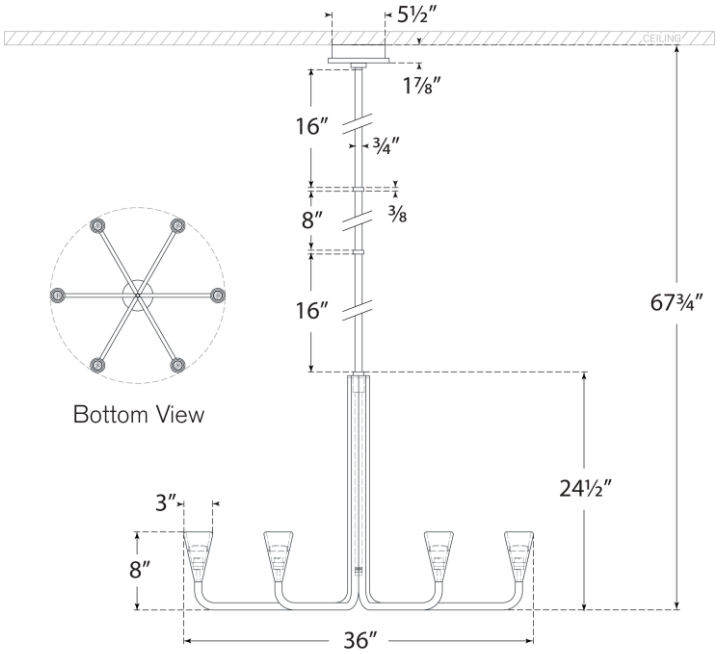

Front View

VISUAL COMFORT