CAL LIGHTING

3625 E. Philadelphia St. Ontario CA. 91761 ◦ Tel: 909.947.5200 ◦ Fax: 909.947.5673 ◦ www.calighting.com ◦ service@calighting.com ◦
Specifications subject to change without notice

Type: _____
Project: _____
Catalog No.: _____
Lamp/Wattage: _____

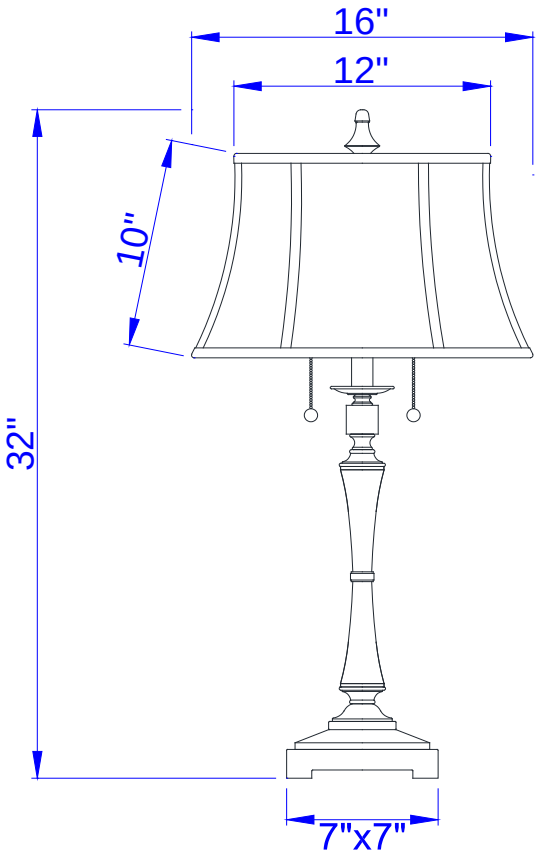

Model No: BO-2443TB
Description: Madison Metal Table Lamp with Burlap Shade and Pull Chain Switch
Material: Metal
Finish : AS (Antiqued Silver)
Height: 32"
Base Width: 7"x7"
Wattage : 60Wx2
Socket : Medium Base (E27)
Switch: On/off
Bulb: Incandescent, CFL
Wire Length: 6'
Wire Color: Black
Shade No:
Material: Burlap
Shade size: 12"x16"x10"
Certificate : c UL us