TEAR SHEET

Symmetric Twist Double Sconce
Item # CHD 1612AB-L

Designer: Chapman & Myers

Height: 20.25"
Width: 14.5"
Extension: 6.75"
Backplate: 4.5" Round
Finishes: AB, AN, BZ, PN
Shade Treatments: L, NP
Shade Details: 14" x 14.5" x 5.5" Rectangle
Socket: 2 - E12 Candelabra
Wattage: 2 - 60 B11
Weight: 4 Pounds
Â©EFC DESIGNS

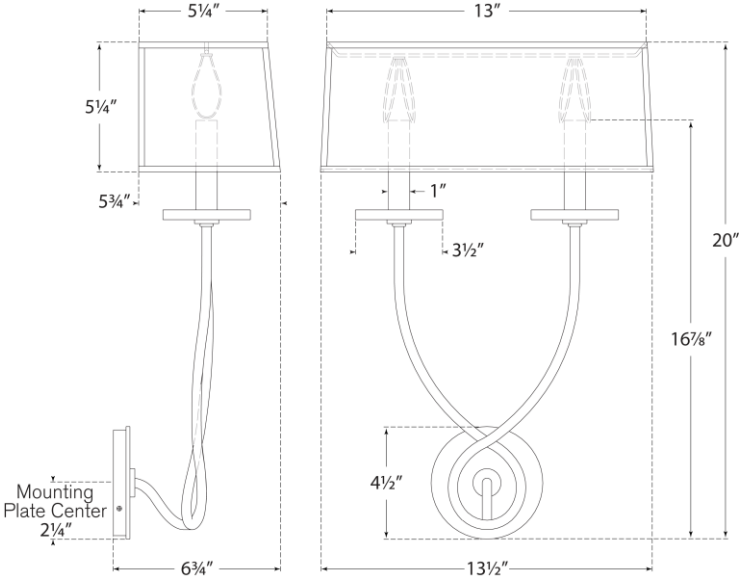

VISUAL COMFORT