dweLED

Fixture Type:

Catalog Number:

Project:

Location:

Geos 6" & 10"

Ceiling Mount

Model & Size	*Color Temp & CRI*	*Watt*	*LED Lumens*	*Delivered Lumens*	*Finish*
❍ FM-4606 6"	❍ 2700K 80 ❍ 3000K 80	8W 8W	551 608	270 300	❍ BR Brushed Brass ❍ TT Titanium ❍ WT White

Example: **FM-4606-27-BR**

• For 277V special order, add an "F" before the finish: FM-4610F-30-TT

DESCRIPTION

Cutting-edge technology in the display industry transformed into a super-thin, less than an inch profile flush mount. Multiple mid-powered LED source illuminate the diffuser uniformly and without socket shadows common in conventional flush mounts.

FEATURES

• Super thin, edge-lit LED panel at less than an inch thick
• High lumen package great for high ceiling applications
• Twist-lock quick install mechanism
• Transformer installed within the Junction Box, transformer dimension: 2.00" x 1.38" x 1.02"
• 5 year warranty

SPECIFICATIONS

Color Temp:	3000K, 2700K
Input:	120 VAC, 50/60Hz
CRI:	80
Dimming:	ELV: 100 - 10%
Rated Life:	70000 Hours
Mounting:	Heavy gauge retention clips support trim firmly. Safety cabling standard., Can be mounted on ceiling or wall in all orientations
Standards:	ETL, cETL
	Damp Location Listed
Construction:	Aluminum body with frosted acrylic diffuser

FINISHES

Brushed Brass | Titanium | White

LINE DRAWING

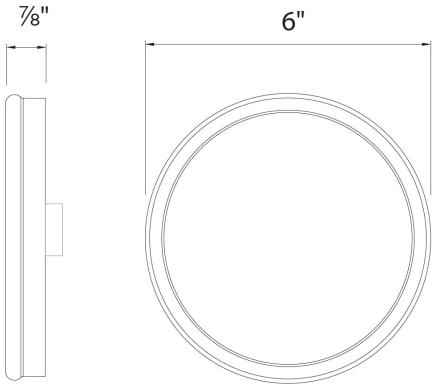

WAC Lighting retains the right to modify the design of our products at any time as part of the company's continuous improvement program. May 2020

dweLED

Fixture Type:

Catalog Number:

Project:

Location:

Geos 6" & 10"

Ceiling Mount

Model & Size	*Color Temp & CRI*	*Watt*	*LED Lumens*	*Delivered Lumens*	*Finish*
❍ FM-4610 10"	❍ 2700K 80 ❍ 3000K 80	12.5W 12.5W	964 1064	545 600	❍ BR Brushed Brass ❍ TT Titanium ❍ WT White

Example: **FM-4610-27-BR**

• For 277V special order, add an "F" before the finish: FM-4610F-30-TT

DESCRIPTION

Cutting-edge technology in the display industry transformed into a super-thin, less than an inch profile flush mount. Multiple mid-powered LED source illuminate the diffuser uniformly and without socket shadows common in conventional flush mounts.

FEATURES

• Super thin, edge-lit LED panel at less than an inch thick
• High lumen package great for high ceiling applications
• Twist-lock quick install mechanism
• Transformer installed within the Junction Box, transformer dimension: 2.00" x 1.38" x 1.02"
• 5 year warranty

SPECIFICATIONS

Color Temp:	3000K, 2700K
Input:	120 VAC, 50/60Hz
CRI:	80
Dimming:	ELV: 100 - 10%
Rated Life:	70000 Hours
Mounting:	Heavy gauge retention clips support trim firmly. Safety cabling standard., Can be mounted on ceiling or wall in all orientations
Standards:	ETL, cETL
	Damp Location Listed
Construction:	Aluminum body with frosted acrylic diffuser

FINISHES

Brushed Brass | Titanium | White

LINE DRAWING

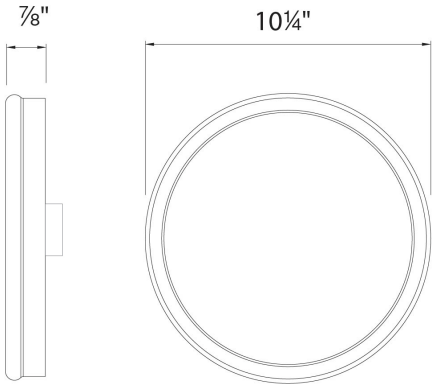

WAC Lighting retains the right to modify the design of our products at any time as part of the company's continuous improvement program. May 2020