# WAC LIGHTING

Fixture Type:

Catalog Number:

Project:

Location:

## Dune 826

Low Voltage Track Luminaire

| *System Type & Voltage* | *Model & Wattage* | *Finish* |
|---|---|---|
| ❍ -HHT H Track - 120 VAC | ❍ 826 50W | ❍ BK Black |
| ❍ -JHT J/J2 Track - 120 VAC | ❍ 826L 75W | ❍ BN Brushed Nickel |
| ❍ -LHT L Track - 120 VAC | | ❍ WT White |

Example: **HHT-826-BK**

### DESCRIPTION

Dune is a unique spot light with solid construction and simple aiming features for easy adjustments. Low Voltage track fixture offered in a wide variety of styles and finishes for a multitude of lighting applications in residential, retail, commercial and hospitality environments. Available in H, J/J2, and L style track configurations. Built-in transformer has a 1W minimum load and can be installed with an LED lamp.

### FEATURES

- Available with LED lamp option
- 350° horizontal rotation and 90° vertical tilt
- Loop back aiming arm for simple adjustments
- Screw on lens cap
- Clear lens included
- Transformer concealed within the fixture
- 5 year warranty

### SPECIFICATIONS

| | |
|---|---|
| **Construction:** | Die-cast aluminum track head with polycarbonate transformer case and track adapter. Bi-pin ceramic socket for MR16 lamp., Die-cast aluminum fixture with polycarbonate track adapter. Heat resistant rubber grips over rear socket assemblies. Ceramic bi-pin sockets. |
| **Power:** | 75W, 50W |
| **Input:** | 120 VAC, 50/60Hz |
| **Dimming:** | ELV: 100-15% |
| **Light Source:** | MR16 ( Order separately ) |
| **Finish:** | Body Electrostatically powder Coated White, Electroplated Brushed Nickel, Body Electrostatically powder Coated Black |
| **Operating Temp:** | -4°F to 104°F (-20°C to 40°C) |
| **Standards:** | UL, cUL, Dry Location Listed |

### FINISHES

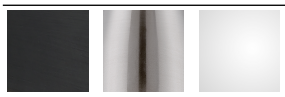

Black | Brushed Nickel | White

### LINE DRAWING

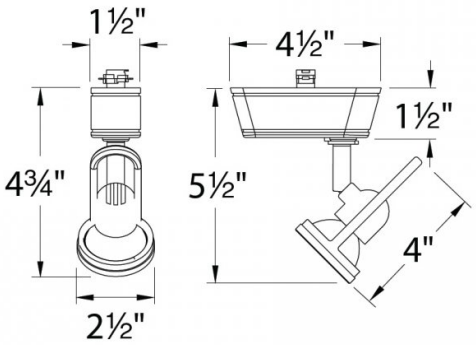

# WAC LIGHTING

Fixture Type:

Catalog Number:

Project:

Location:

## Dune 826

Low Voltage Track Luminaire

### ACCESSORIES

| | *Model* | *Description* | *Finish* |
|---|---|---|---|
| | **LENS-16-AMB**<br>**LENS-16-BLU**<br>**LENS-16-GRN**<br>**LENS-16-RED** | *Colored Lens*<br>*Colored Lens*<br>*Colored Lens*<br>*Colored Lens* | *Amber*<br>*Blue*<br>*Green*<br>*Red* |
|  | **LENS-16-FR** | *Clear/Frosted Lens* | *Frosted* |
| | **LENS-16-SPR** | *Spread Lens* | *Spread Lens* |
| | **LENS-16-UVF** | *UV Filter lens* | *Clear* |
| | **LENS-16-BEL** | *Beam Elongating Lens* | *Beam Elongating* |
| | **LENS-16-HCL** | *Honeycomb Louver* | *Black* |