ASSEMBLY INSTRUCTIONS

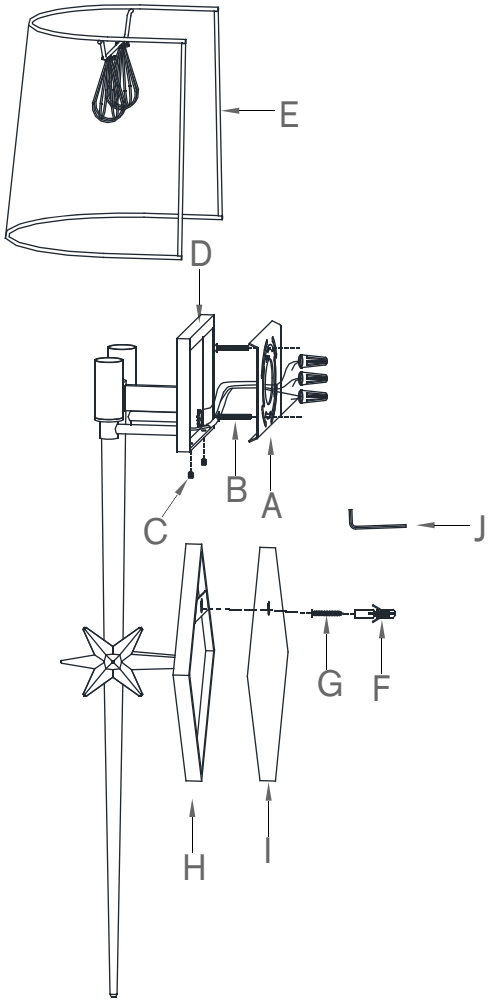

Etoile Large Tail Sconce

Item # S 2321

WE RECOMMEND INSTALLATION OF THIS LIGHTING FIXTURE BE DONE BY A LICENSED ELECTRICIAN.

WARNING * SWITCH OFF THE MAIN ELECTRICAL SUPPLY FROM THE MAIN FUSE BOX/CIRCUIT BREAKER BEFORE INSTALLATION.**

INSPECT ITEM CAREFULLY BEFORE ATTEMPTING TO INSTALL. IF THERE IS ANY DAMAGE OR OBVIOUS DEFECT, DO NOT INSTALL.

ITEM MAY NOT BE RETURNED ONCE IT HAS BEEN INSTALLED.

1. Carefully remove all parts from the carton.
2. Remove mounting plate (A) from base of light fixture (D) by removing set screws (C) using Allen wrench (J).
3. Place fixture base (D) to wall outlet, mark an oulter line for base (H), make sure they are vertical to each other. Remove the light fixture.
4. Place the card template (I) to the marked area, mark a point for hanging hole on the wall. Remove card template (I).
5. Drill a small hole on the marked point, the hole should be big enough for plastic anchor (F). Push the plasitc anchor (F) into the hole.
6. Insert screw (G) into the plastic anchor (F), make sure 1/8 screw head visible.
7. Affix mounting plate (A) to wall outlet box with mounting screws (B) provided.
8. Attach ground (green or green/yellow) wire to ground wire from wall outlet box (usually green or copper in color), fasten together with a plastic wire connector. Tightly wrap the wire connector with electrical tape. so the end of the connector is sealed. IT IS IMPERATIVE THAT THE OUTLET BOX IN YOUR HOME BE PROPERLY GROUNDED.
9. Connect neutral (white) fixture wire coming from fixture base to neutral (usually white) outlet wire. Fasten both wires together with a plastic wire connector and tightly wrap the wire connector with electrical tape.
10. Repeat the same procedure with the hot (black) wires. Always make sure that no wire strands are eft outside the connectors. DO NOT REVERSE THE HOT AND NEUTRAL CONNECTIONS OTHERWISE SAFETY WILL BE COMPROMISED.
11. Attach fixture base (D) to the affixed mounting plate (A) and secure with set screws (C). Tighten with Allen wrench (J).
12. Hook base (H) to the screw head of (G).
13. Insert the specified light bulbs (not included) into sockets.
14. Clip shade (E) onto the light bulbs.
15. Restore power and test fixture. Installation is complete.

*** Clean with a dry, soft cloth only. Use no harsh abrasives or chemical agents.

Intertek DRY

VISUAL COMFORT & CO. Est. 1987