WAC LIGHTING

Fixture Type:

Catalog Number:

Project:

Location:

Turbo

Bath & Vanity Light

Model	*Color Temp & CRI*	*Lumens*	*Finish*
❍ WS-180414	❍ 30 3000K - 90 ❍ 35 3500K - 90	950 1000	❍ BN Brushed Nickel ❍ CH Chrome

Example: **WS-180414-30-BN**

DESCRIPTION

With soft illumination diffused through translucent acrylic, Turbo adds a clean, modern look to baths and other types of modern dcor.

FEATURES

- Multiple LED array for uniform illumination
- Driver concealed within the fixture
- 5 year warranty

SPECIFICATIONS

Color Temp:	3000K, 3500K
Input:	120-277 VAC, 50/60Hz
CRI:	90
Dimming:	ELV: 100-5%, TRIAC: 100-5%
Rated Life:	50000 Hours
Mounting:	Installs over a 3" or 4" Junction Box, Can be mounted on ceiling or wall in all orientations, Can be mounted on ceiling or wall vertically
Standards:	ETL, cETL, Title 24 JA8-2016 Compliant, Energy Star 2.0 Damp Location Listed
Construction:	Nickel plated steel with polycarbonate diffuser

FINISHES

Brushed Nickel Chrome

LINE DRAWING

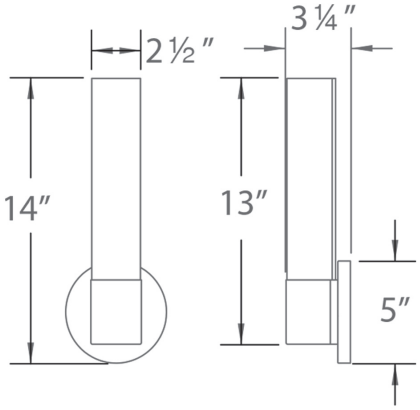

WS-180414

WAC Lighting retains the right to modify the design of our products at any time as part of the company's continuous improvement program. May 2020

WAC LIGHTING

Fixture Type:

Catalog Number:

Project:

Location:

Turbo

Bath & Vanity Light

Model	*Color Temp & CRI*	*Lumens*	*Finish*
❍ WS-180424	❍ 30 3000K - 90 ❍ 35 3500K - 90	1480 1570	❍ BN Brushed Nickel ❍ CH Chrome

Example: **WS-180424-30-BN**

DESCRIPTION

With soft illumination diffused through translucent acrylic, Turbo adds a clean, modern look to baths and other types of modern dcor.

FEATURES

- Multiple LED array for uniform illumination
- Driver concealed within the fixture
- 5 year warranty

SPECIFICATIONS

Color Temp:	3000K, 3500K
Input:	120-277 VAC, 50/60Hz
CRI:	90
Dimming:	ELV: 100-5%, TRIAC: 100-5%
Rated Life:	50000 Hours
Mounting:	Installs over a 3" or 4" Junction Box, Can be mounted on ceiling or wall in all orientations, Can be mounted on ceiling or wall vertically
Standards:	ETL, cETL, Title 24 JA8-2016 Compliant, Energy Star 2.0 Damp Location Listed
Construction:	Nickel plated steel with polycarbonate diffuser

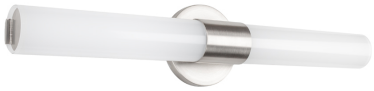

FINISHES

Brushed Nickel

Chrome

LINE DRAWING

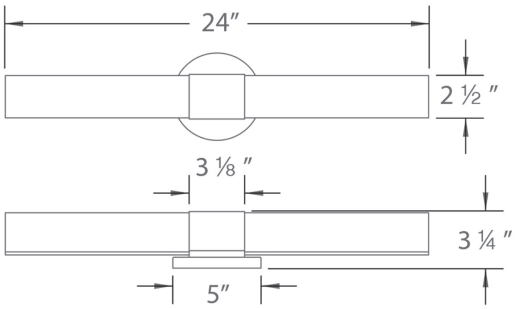

WS-180424

WAC Lighting retains the right to modify the design of our products at any time as part of the company's continuous improvement program. May 2020