Assembly Instruction Sheet #IS-1121P48
For Style 1121P48

Tools Required: Flathead screwdriver, Philips screwdriver, pliers, wire cutters, wire strippers, electrical tape, safety glasses.
Light Source: (63) G9 MAX 40W (Not include).
Estimated Assembly Time: 15-30 minutes
Preparation: Identify and inspect all parts before beginning installation. Check package content list and diagrams below to be sure all parts are present. If any parts are missing or damaged, do not attempt to assemble, install, or operate the fixture. Contact customer service for replacement parts.

⚠ Warnings and Cautions

Turn off electricity at circuit breaker or main fuse box before installation. Consult a licensed electrician if in doubt.
These instructions are provided for your safety. It is very important you read them completely before installing the fixture.
We strongly recommend that a licensed, professional electrician perform the installation.
Disconnect fixture from power source before replacing bulbs. Make sure bulbs are given sufficient time to cool before removal.

Package Contents

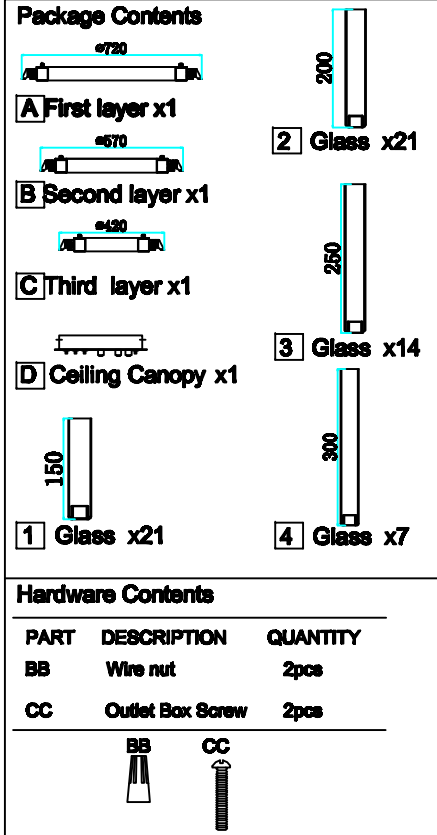

Hardware Contents

PART	DESCRIPTION	QUANTITY
BB	Wire nut	2pcs
CC	Outlet Box Screw	2pcs

STEP 1- Release Crossbar from Ceiling Canopy .

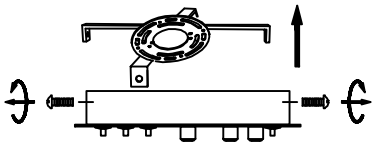

Figure 1

STEP 2- Install Third layer to Ceiling

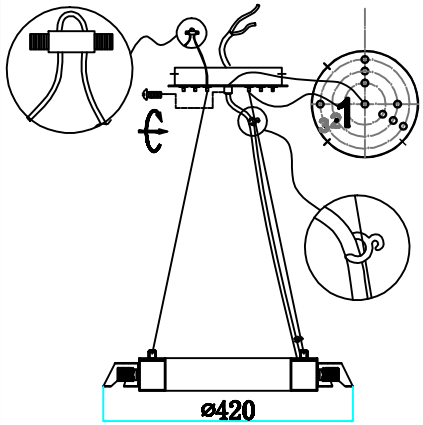

Figure 2

ReleasedDate:2019-4-17

STEP 3- Install Second layer to Ceiling.

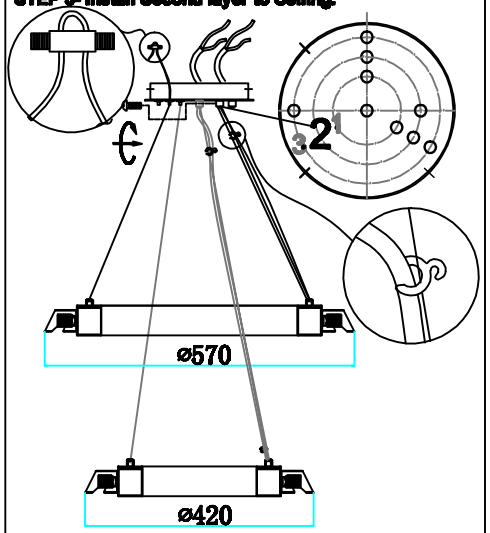

Figure 3

STEP 4- Install First layer to Ceiling

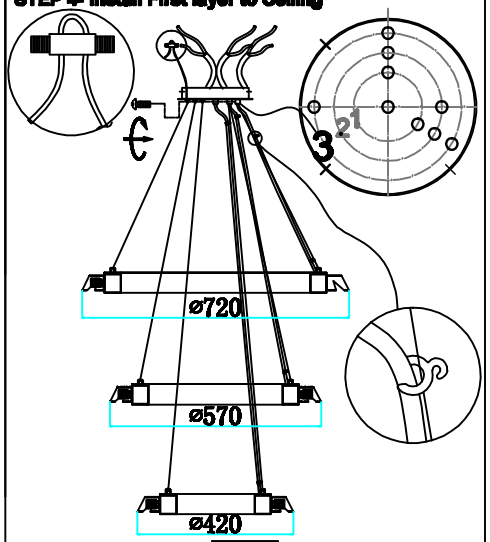

Figure 4

STEP 5 - Wire Connections

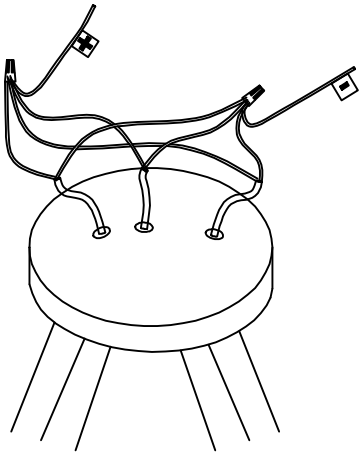

Figure 5

STEP 6– Attach Crossbar to Outlet Box

A.Pass the supply wires through the Mounting bracket (EE).
Attach the Mounting bracket (EE) to the Outlet Box with the head of the Green Ground Screw facing you.
Secure it with Outlet Box Screws (CC).
Tighten until snug.

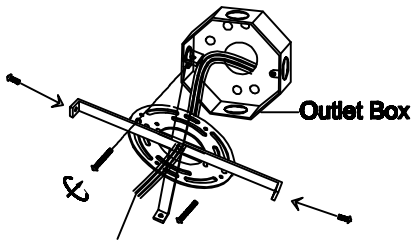

Supply Wires with
Outlet Box Screws Ground Wire

Figure 6

ReleasedDate:2019-4-17

\\Server\开发部\结构部\图纸\CAD文件\1121p48-63-602.dwg, 2021/10/20 星期三 上午 9:51:05, Administator,
DWG To PDF.pc3