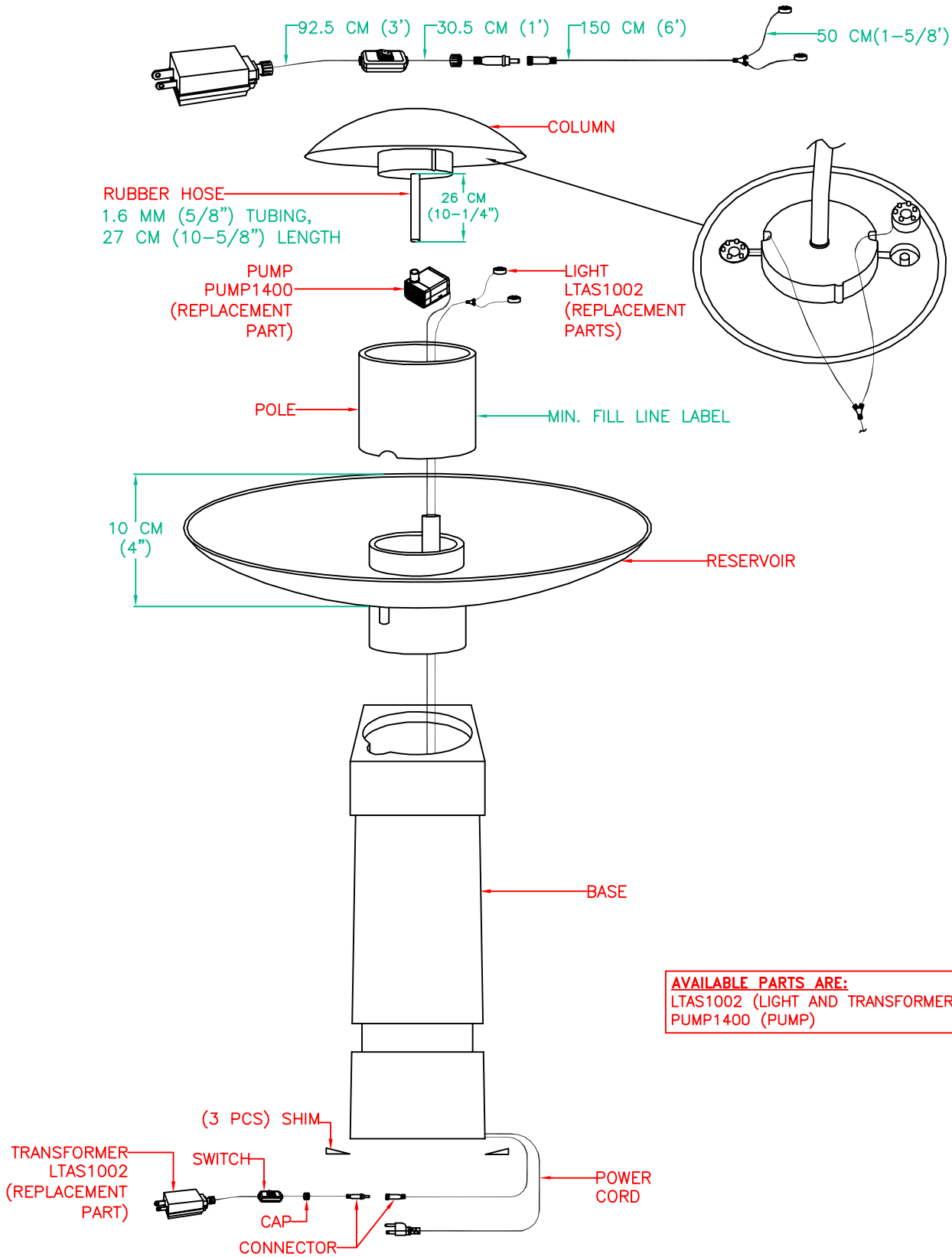

AVAILABLE PARTS ARE:
LTAS1002 (LIGHT AND TRANSFORMER)
PUMP1400 (PUMP)

KENROY HOME
3723 Regent Boulevard
JACKSONVILLE, FL. 32224
PHONE: 904-642-4340
FAX: 904-642-4150

THIS DOCUMENT AND THE INFORMATION THAT IT DISCLOSES IS THE EXCLUSIVE PROPERTY OF KENROY HOME. ANY REPRODUCTION OR USE OF THIS DRAWING IN PART OR IN WHOLE, WITHOUT THE EXPRESS CONSENT OF THE PROPRIETOR IS PROHIBITED. © 2018 KENROY HOME.

DATE: 03/02/2018	SCALE: NONE	DRAWN BY: ARVIN	
REFERENCE: OSWEGO FLOOR FOUNTAIN		APPROVAL:	

REVISION DATE:	MODEL #: 51026WDGCOP
REVISION DATE:	
REVISION DATE:	FINISHES: WOOD GRAIN AND COPPER
REVISION DATE:	PAGE: 1 OF: 2

PRODUCT SPECIFICATIONS

OVERALL ASSEMBLED DIMENSIONS

HEIGHT: 80 CM (31–1/2"), DIA: 67.3 CM (26–1/2").

- **PUMP:** UL LISTED. 120V, 60HZ, 5 WATT. MODEL: YH–400MIX, SUBMERSIBLE FOUNTAIN PUMP, FLOW RATE: 105 GPH. HEAD: 110 CM (43–1/4") HEIGHT.
- **2 LIGHTS:** UL LISTED. 2 X 0.15 WATT, SUBMERSIBLE LED CLUSTER. WITH WATERPROOF ROCKER SWITCH. (CCT) 3000K.
- **TRANSFORMER:** UL LISTED. 5V, 100MA, MODEL: GP–SW050DC0100–IP44(US) A, CLASS 2 TRANSFORMER, INPUT: 120V, 60HZ. OUTPUT: 5V, 0.5 WATT. UL: E334265.
- **COLUMN:** PAINTED RESIN IN COPPER FINISH, 30.5 CM (12") DIA. x 7.6 CM (3") HEIGHT, SHAPED AS SHOWN. WEIGHT: 2.2 LBS.
- **POLE:** PAINTED RESIN IN COPPER FINISH, 16.5 CM (6–1/2") DIA. x 14.6 MM (5–3/4") HEIGHT, SHAPED AS SHOWN. WEIGHT: 1.32 LBS.
- **RESERVOIR:** PAINTED RESIN IN COPPER FINISH, 67.3 CM (26–1/2") DIA. x 10 CM (4") HEIGHT. SHAPED AS SHOWN. WEIGHT: 11.44 LBS.
- **BASE:** PAINTED RESIN IN WOOD GRAIN FINISH, 19 CM (7–1/2") SQ. MAX. x 57.1 CM (22–1/2") HEIGHT. SHAPED AS SHOWN. WEIGHT: 7.26 LBS.
- **PUMP POWER CORD:** UL LISTED, FROM PUMP TO PLUG: MIN. 3.3 M (11') LENGTH. 18 AWG., 3 CONDUCTORS, 105°C, TYPE SJTW, WATER PROOF. BLACK COLOR. COPPER MATERIAL. WIRES MUST BE LEAD FREE.
- **LABELS:** MANUFACTURING DATE, MODEL # AND COUNTRY OF ORIGIN LABEL PROVIDED, WARNING LABEL FOR PARTS AND PARTS ARROW LABEL WERE STUCK ON INSIDE OF BOX.

PACKAGING AND SHIPPING DETAILS

- THIS FOUNTAIN WAS DISASSEMBLED FOR SHIPPING, EACH PART IS CAREFULLY WRAPPED IN A PLASTIC BAG AND PLACED SECURELY IN THE INNER PACKING SO THEY CAN NOT MOVE DURING SHIPPING.
- THE CARTON IS MADE OF DOUBLE WALL CORRUGATED CARDBOARD "A MA A". BROWN IN COLOR. THE INNER PACKING IS DIE–CUT CARDBOARD AND/OR STYROFOAM SUFFICIENT TO PROTECT AND SECURE THE FOUNTAIN AND MUST PASS THE FEDEX AND ISTA–3A DROP TEST REQUIREMENTS.
- EACH CARTON SHALL BE PRINTED WITH A LINE DRAWING AND THE KENROY HOME NAME, LOGO AND CUSTOMER SERVICE PHONE NUMBER (FOUNTAIN HELP LINE – 904.642.4340), MODEL NUMBER FINISH, EACH CARTON SHALL BE PROVIDED A UPC LABEL. THE UPC BAR CODE AS FOLLOWS: 053392984403.

OTHER DETAILS

- MODEL 51026WDGCOP INSTRUCTIONS ARE TO BE PACKED WITH EACH FOUNTAIN. INSTRUCTIONS MUST BE PRINTED CLEARLY ON QUALITY PAPER.
- ALL VISIBLE RESIN PARTS MUST MATCH FOUNTAIN FINISH UNLESS OTHERWISE SPECIFIED.
- ALL BAGS MUST BE LABELED WITH OFFICIAL "THIS BAG IS NOT A TOY" STATEMENT.
- WE REQUIRED THAT A COLOR PIGMENT CLOSE TO THE FINISH COLOR OF THE FOUNTAIN MUST BE MIXED INTO THE RESIN/MATERIAL PRIOR TO THE MOLD COMPLETION. THIS IS TO ASSURE IF WE HAVE ANY PEELING OF PAINT THE RESIN IS THE SAME COLOR AS THE FINISH OF THIS ITEM.
- EACH FOUNTAIN SHOULD HAVE A PIGMENT COLOR REFERENCE CHIP FOR THE UNPAINTED GOODS FOR INSPECTION.
- THIS FOUNTAIN IS RATED FOR OUTDOOR USE.
- ASSEMBLY TIME: 10 MINUTES.
- DIMS OF BOX: 77.5 CM (30–1/2") LENGTH x 43.2 CM (17") WIDTH x 77.5 CM (30–1/2") HEIGHT. (CUFT.: 9.15')
- NET WEIGHT: 25.3 LBS. GROSS WEIGHT: 27.5 LBS.
- THIS FOUNTAIN IS RATED FOR OUTDOOR USE.

KENROY HOME
3723 Regent Boulevard
JACKSONVILLE, FL. 32224
PHONE: 904–642–4340
FAX: 904–642–4150

THIS DOCUMENT AND THE INFORMATION THAT IT DISCLOSES IS THE EXCLUSIVE PROPERTY OF KENROY HOME. ANY REPRODUCTION OR USE OF THIS DRAWING IN PART OR IN WHOLE, WITHOUT THE EXPRESS CONSENT OF THE PROPRIETOR IS PROHIBITED. © 2018 KENROY HOME.

DATE: 03/02/2018	SCALE: NONE	DRAWN BY: ARVIN	REVISION DATE:	MODEL #: 51026WDGCOP
REFERENCE: OSWEGO FLOOR FOUNTAIN		APPROVAL:	REVISION DATE:	FINISHES: WOOD GRAIN AND COPPER
			REVISION DATE:	PAGE: 2 OF: 2