TEAR SHEET

Entoure 17" Rotating Pendant

Item # LR 5850PN

Designer: Lauren Rottet

O/A Height: 67"
Fixture Height: 25"
Width: 17.25"
Canopy: 4.75" x 8.5" Rectangle
Finishes: BZ, HAB, PN
Socket: Dedicated LED
Wattage: 45w (5400lm)
Weight: 21 Pounds
Note: UL Only | Custom Height Available

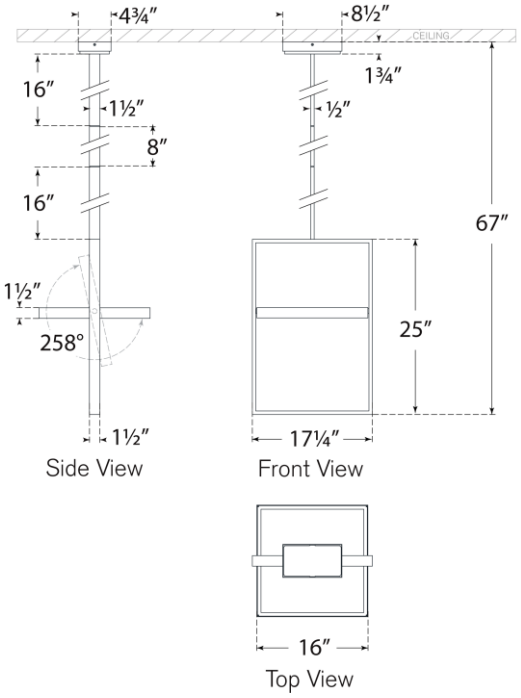

VISUAL COMFORT & CO.

DAMP LED 4