TEAR SHEET

Lexie 14" Globe Lantern
Item # CHC 5515BZ

Designer: Chapman & Myers

Height: 17.5"
Width: 14"
Canopy: 5" Round
Finishes: AB, AI, AN, BZ, GI, PN
Socket: 4 - E12 Candelabra
Wattage: 4 - 6.5 LED B11
Weight: 14 Pounds

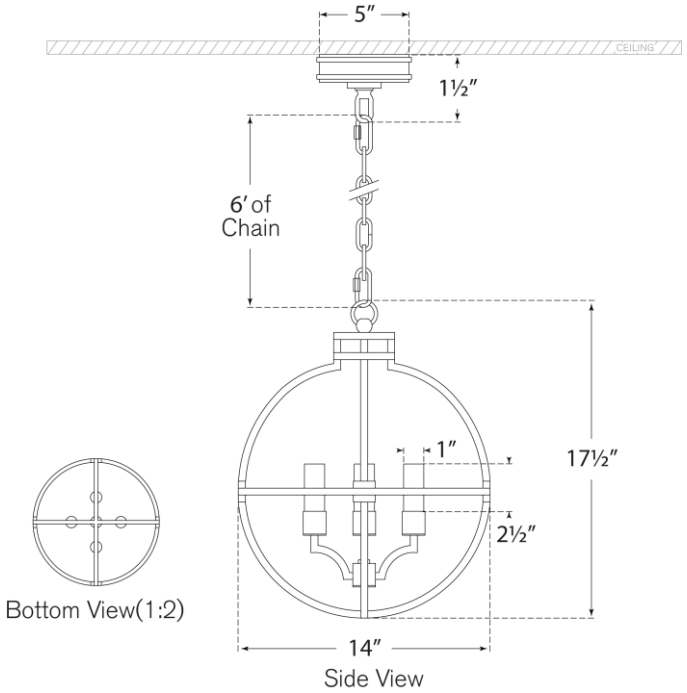

VISUAL COMFORT