TEAR SHEET

Cross Bouillotte Large Sconce
Item # CHD 1191AB-L

Designer: Chapman & Myers

Height: 15"
Width: 15.5"
Extension: 6"
Backplate: 4.25" Round
Finishes: AB, AN, BZ, PN
Shade Treatments: L, NP
Shade Details: 14.5" x 15.5" x 5.5" Shield
Socket: 2 - E12 Candelabra
Wattage: 2 - 40 B11
Weight: 3 Pounds
Note: French Wired

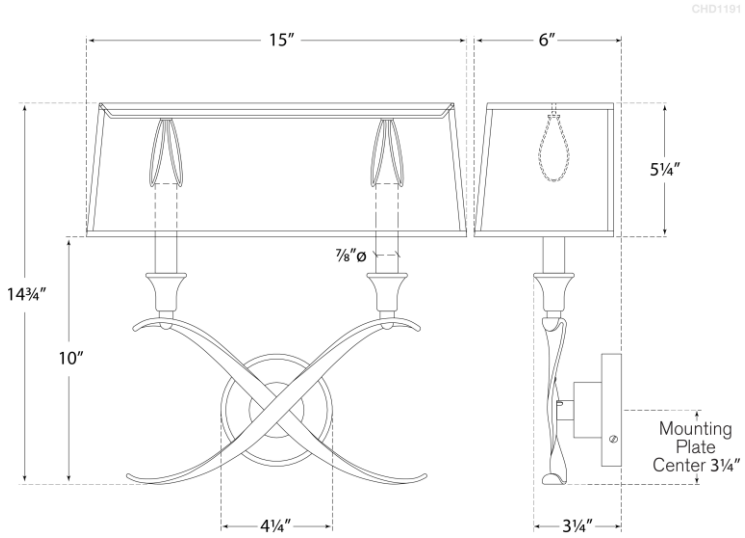

VISUAL COMFORT