2021 CATALOG

access LIGHTING

TABLE OF CONTENTS

VISUAL INDEX	2
FAMILIES	12
FLUSH MOUNT	16
SEMI-FLUSH	112
PENDANT	126
DIRECTIONAL	188
WALL SCONCE	212
VANITY	272
MIRROR	312
OUTDOOR	316
TURTLE	396
MOTION SENSOR	404
EMERGENCY	408
READING	414
UNDERCABINET	420
FINISH	426
INDEX	428

VISUAL INDEX

FLUSH MOUNT

AERO
68

ATOM
101

BEAT
30

BLOC
36

BOXER
92

CATCH
110

COBALT
96

COMO
18

CONGA
74

DISC
94

GRANADA
28

LUCIA
24

LUCID
24

MADRID
40

MAESTRO
22

MALAGA
20

MIA
59

MID TOWN
58

MINI II
111

MODPLUS
42

FLUSH MOUNT

ORION
109

RADIANT
26

REEL
32

SOLERO
86

SOLERO II
80

SOLERO OVAL
87

SPARC
88

SQUARED
38

TARA
64

TRANSFORMER
35

VISION
60

VISION ROUND
63

ZENON
106

VISUAL INDEX

SEMI FLUSH

BOULDER
123

DUO
114

MID TOWN
124

PORT NINE
116

SOLERO
125

SPHERE
122

WIRED
122

PENDANT

AERO
138

AVIATOR
133

BLEND
158

BOULDER
174

CAFE
164

CALLISTO
144

CARMEL
131

FLOAT
129

PENDANT

GLOW
154

HOLM
130

I-BIZA
142

ICICLE
178

IRON
184

MID TOWN
136

MULTIS
182

NITROGEN
146

NOSTALGIA
158

ODYSSEY
183

PILSON
166

PORT NINE
168

PROTEUS
179

RADIANT
134

SIMPLICITE
150

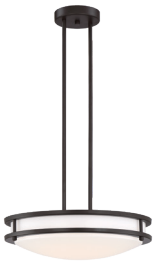
SOLERO
161

SPARTAN
180

SQUARED
133

TARA
140

WIRED
162

VISUAL INDEX

DIRECTIONAL SPOTLIGHT

CAFE
192

COBRA
200

COMET
206

LINCOLN
194

MIRAGE
208

TRANSFORMER
190

VIPER
198

WALL SCONCE

AQUEOUS
264

ARCHI
269

ARTEMIS
242

BI-PUNCH
235

BOULDER
224

BOW
229

CAFE
216

COBALT
263

CREST
256

DAPHNE
260

ELEMENTARY
261

HAUS
228

WALL SCONCE

ICONIC
217

IRON
236

LOLA
239

LUX
232

MADRID
231

METRO
238

MID TOWN
226

MONA
259

NITRO2
262

NUMERO
230

OSLO
266

PERCH
268

PORT NINE
218

PRONG
252

PUNCH
235

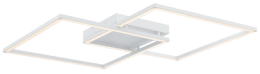

SQUARED
214

UPTOWN
270

ZENON
258

VISUAL INDEX

VANITY

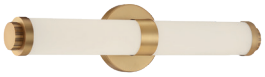

AQUA
280

ARC
286

ARCHI
302

BOULDER
295

CITI
276

GENEVA
294

HELIUM
308

MADISON
282

NETHERTON
274

NITRO2
305

OSLO
298

OXYGEN
310

PERCH
300

SUMMIT
284

TUBE
292

VAIL
288

MIRROR

PENINSULA
314

OUTDOOR

ADAPT
395

AMORA
324

ARTEMIS
346

AVALON
318

BAYSIDE
342

BERMUDA
352

BRICK
382

CABO
374

CILINDRO
356

CLIFTON
372

CONE
331

COVE
358

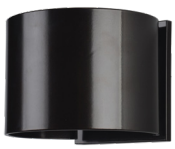

CURVE
329

EDGE
326

HUBERT
344

KO
392

LA VIDA
322

MARGATE
360

MARINO
332

MATIRA
334

VISUAL INDEX

OUTDOOR

MONTREAL
364

MYRA
390

NAUTICUS
376

NEVIS
348

NYMPH
381

OCEANUS
383

POSEIDON
338

REVEAL
365

SANDPIPER
336

SILO
319

SOLANO
320

SOLL
370

SQUARE
328

TUXEDO
362

ULKO
384

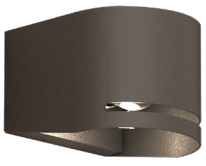

VIVRE
322

TURTLE

MATIRA
400

POSEIDON
399

TORTUGA
398

MOTION SENSOR

LUCID
406

MODPLUS
407

EMERGENCY

MODPLUS
410

SOLERO
412

READING

BUNK
417

CYPRUS 2
419

EPIPHANIE
418

UNDERCABINET

INTELED
422

FAMILIES

AERO

PENDANT
138

SEMI-FLUSH
68

BOULDER

PENDANT
174

SEMI-FLUSH
123

WALL SCONCE
224

VANITY
295

MADRID

FLUSH MOUNT
40

WALL SCONCE
231

MID TOWN

PENDANT
136

SEMI-FLUSH
124

WALL SCONCE
226

MODPLUS

FLUSH MOUNT
42

FLUSH MOUNT
46

FLUSH MOUNT
45

3 CCT SELECTABLE
56

EMERGENCY
410

MOTION SENSOR
407

PORT NINE

PENDANT
168

PENDANT
170

PENDANT
172

SEMI-FLUSH
116

SEMI-FLUSH
118

SEMI-FLUSH
120

WALL SCONCE
218

WALL SCONCE
220

WALL SCONCE
222

FAMILIES

RADIANT

PENDANT
134

WALL SCONCE
26

SOLERO

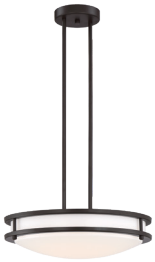

PENDANT
161

SEMI-FLUSH
125

FLUSH MOUNT
86

FLUSH MOUNT OVAL
87

3 CCT SELECTABLE
86

SOLERO
412

SQUARED

PENDANT
133

FLUSH MOUNT
38

TARA

PENDANT
140

FLUSH MOUNT
64

WIRED

PENDANT
162

SEMI-FLUSH
122

MALAGA

FLUSH MOUNT

COMO

49960LEDD-BL/ACR
Black Finish

49960LEDD-WH/ACR
White Finish

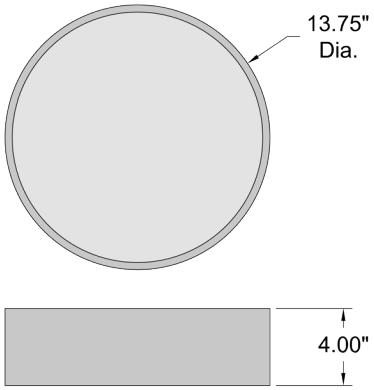

49960LEDD-SAT/ACR
LED Flush Mount
Satin Finish
Acrylic Lens
13.75''DIA. x 4''H
1 x 16 W SSL Dedicated LED (Included)
945 Delivered Lumens
3000K, 90 CRI, 120v
Dimmable
Damp Location
UL (US/Canada) Listed
JA8-2016/Title 24 Listed

49961LEDD-SAT/ACR
Satin Finish

49961LEDD-WH/ACR
White Finish

49961LEDD-BL/ACR

LED Flush Mount
Black Finish
Acrylic Lens
17.75''DIA. x 4''H
1 x 24 W SSL Dedicated LED (Included)
1240 Delivered Lumens
3000K, 90 CRI, 120v
Dimmable
Damp Location
UL (US/Canada) Listed
JA8-2016/Title 24 Listed

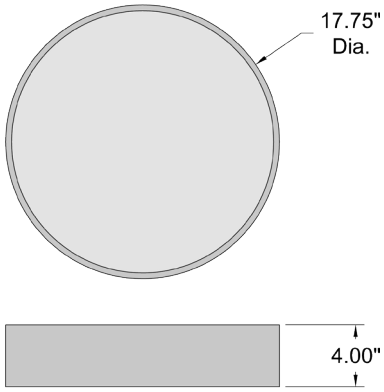

COMO

49962LEDD-BL/ACR
Black Finish

49962LEDD-SAT/ACR
Satin Finish

49962LEDD-WH/ACR

LED Flush Mount
White Finish
Acrylic Lens
21.75''DIA. x 4''H
1 x 40 W SSL Dedicated LED (Included)
2523 Delivered Lumens
3000K, 90 CRI, 120v
Dimmable
Damp Location
UL (US/Canada) Listed
JA8-2016/Title 24 Listed

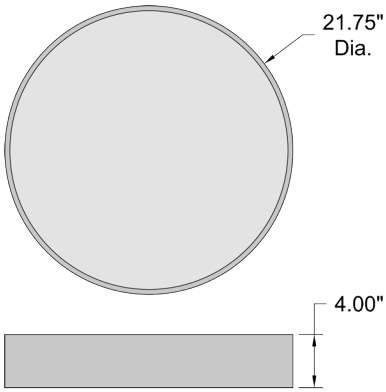

MALAGA

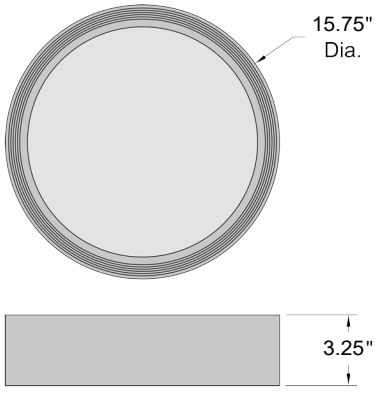

49970LEDD-MBL/ACR

LED Flush Mount

Matte Black Finish with Gold Accent
Acrylic Lens
15.75''DIA. x 3.25''H
1 x 24 W SSL Dedicated LED (Included)
1062 Delivered Lumens
3000K, 90 CRI, 120v
Dimmable
Damp Location
UL (US/Canada) Listed
JA8-2016/Title 24 Listed

MALAGA

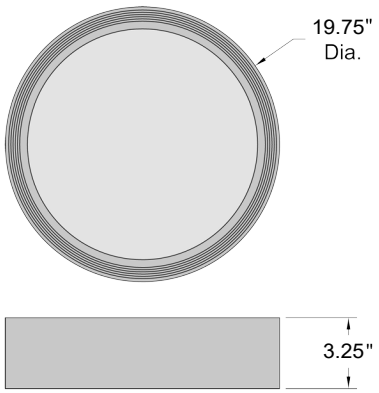

49971LEDD-MBL/ACR

LED Flush Mount

Matte Black Finish with Gold Accent
Acrylic Lens
19.75''DIA. x 3.25''H
1 x 40 W SSL Dedicated LED (Included)
2155 Delivered Lumens
3000K, 90 CRI, 120v
Dimmable
Damp Location
UL (US/Canada) Listed
JA8-2016/Title 24 Listed

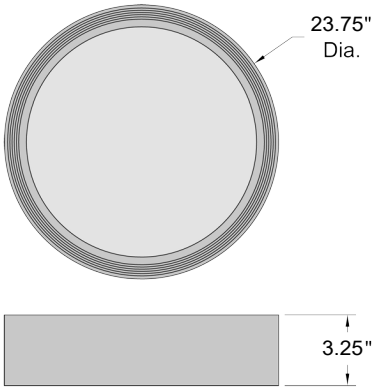

49972LEDD-MBL/ACR

LED Flush Mount

Matte Black Finish with Gold Accent
Acrylic Lens
23.75''DIA. x 3.25''H
1 x 40 W SSL Dedicated LED (Included)
2676 Delivered Lumens
3000K, 90 CRI, 120v
Dimmable
Damp Location
UL (US/Canada) Listed
JA8-2016/Title 24 Listed

MAESTRO

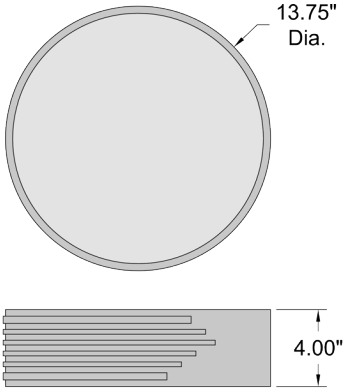

49950LEDD-BL/ACR

LED Flush Mount

Black Finish with Gold Accent
Acrylic Lens
13.75''DIA. x 4''H
1 x 16 W SSL Dedicated LED (Included)
904 Delivered Lumens
3000K, 90 CRI, 120v
Dimmable
Damp Location
UL (US/Canada) Listed
JA8-2016/Title 24 Listed

MAESTRO

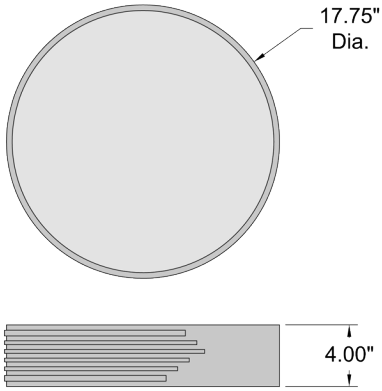

49951LEDD-BL/ACR

LED Flush Mount

Black Finish with Gold Accent
Acrylic Lens
17.75''DIA. x 4''H
1 x 24 W SSL Dedicated LED (Included)
1271 Delivered Lumens
3000K, 90 CRI, 120v
Dimmable
Damp Location
UL (US/Canada) Listed
JA8-2016/Title 24 Listed

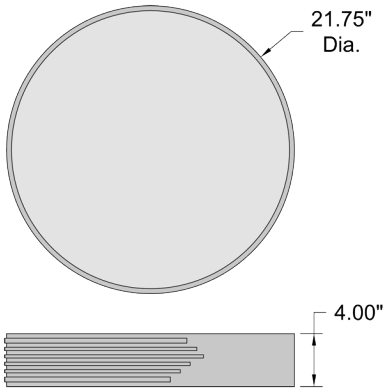

49952LEDD-BL/ACR

LED Flush Mount

Black Finish with Gold Accent
Acrylic Lens
21.75''DIA. x 4''H
1 x 40 W SSL Dedicated LED (Included)
2573 Delivered Lumens
3000K, 90 CRI, 120v
Dimmable
Damp Location
UL (US/Canada) Listed
JA8-2016/Title 24 Listed

LUCIA

49990LEDD-SAT/ACR
Satin Finish

49990LEDD-WH/ACR
White Finish

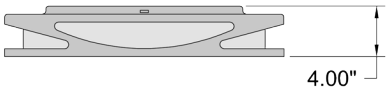

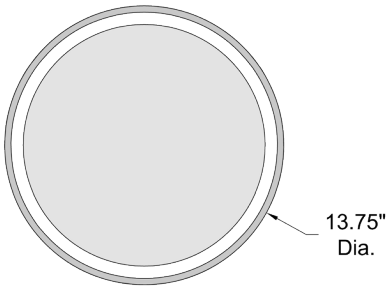

49990LEDD-BL/ACR
LED Flush Mount
Black Finish
Acrylic Lens
13.75''DIA. x 4''H
1 x 16 W SSL Dedicated LED (Included)
824 Delivered Lumens
3000K, 90 CRI, 120v
Dimmable
Damp Location
UL (US/Canada) Listed
JA8-2016/Title 24 Listed

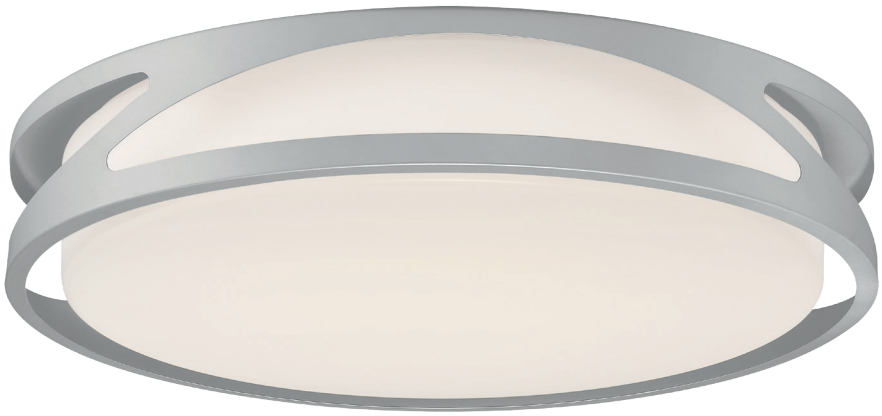

49991LEDD-BL/ACR
Black Finish

49991LEDD-SAT/ACR

LED Flush Mount
Satin Finish
Acrylic Lens
17.75''DIA. x 4''H
1 x 24 W SSL Dedicated LED (Included)
1455 Delivered Lumens
3000K, 90 CRI, 120v
Dimmable
Damp Location
UL (US/Canada) Listed
JA8-2016/Title 24 Listed

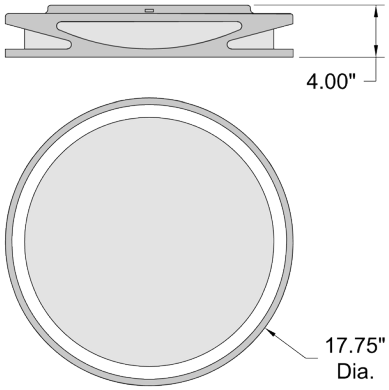

49991LEDD-WH/ACR
White Finish

LUCIA

49992LEDD-BL/ACR
Black Finish

49992LEDD-WH/ACR

LED Flush Mount
White Finish
Acrylic Lens
21.75''DIA. x 4''H
1 x 40 W SSL Dedicated LED (Included)
2592 Delivered Lumens
3000K, 90 CRI, 120v
Dimmable
Damp Location
UL (US/Canada) Listed
JA8-2016/Title 24 Listed

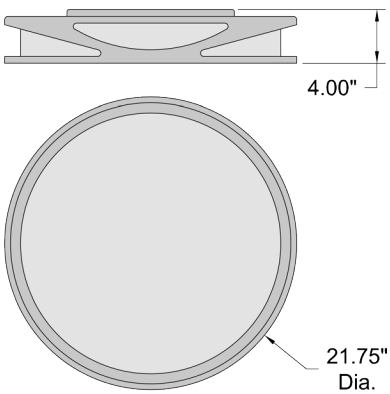

49992LEDD-SAT/ACR
Satin Finish

RADIANT

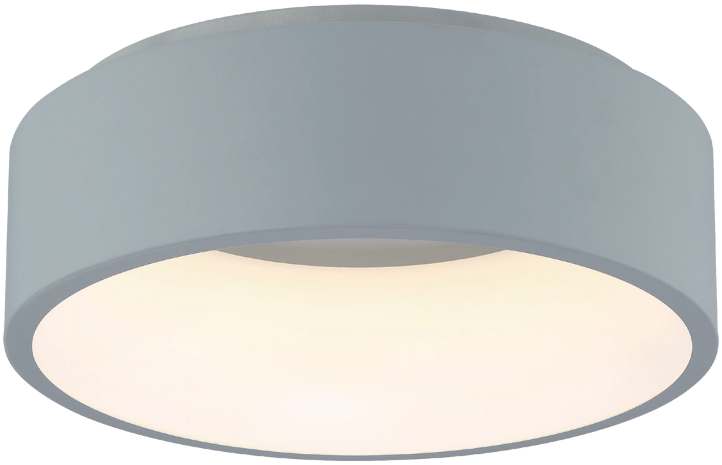

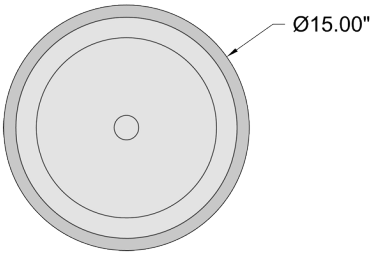

50941LEDD-GRY/ACR
Dual Voltage LED Flush Mount
Gray Finish
Acrylic Lens
15''DIA. x 5.25''H
1 x 21 W SSL Dedicated LED (Included)
708 Delivered Lumens
3000K, 85 CRI, 120-277v
Dimmable
Damp Location
UL (US/Canada) Listed

50941LEDD-WH/ACR
White Finish

RADIANT

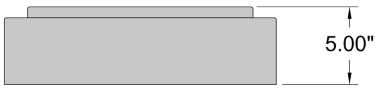

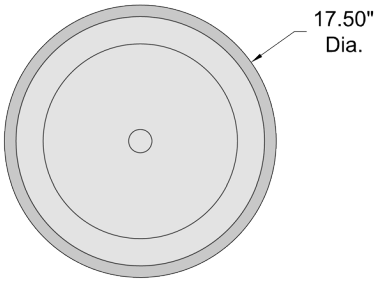

50939LEDD-WH/ACR
LED Flush Mount
White Finish
Acrylic Lens
17.5''DIA. x 5''H
1 x 30 W SSL Dedicated LED (Included)
1400 Delivered Lumens
3000K, 81 CRI, 120v
Dimmable
Damp Location
UL (US/Canada) Listed

50939LEDD-GRY/ACR
Gray Finish

GRANADA

49980LEDD-BL/ACR
Black Finish

49980LEDD-SAT/ACR
Satin Finish

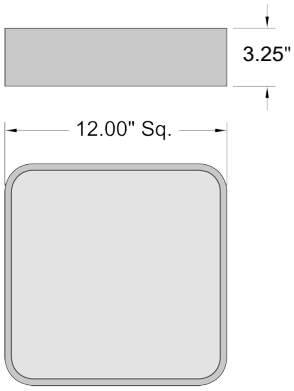

49980LEDD-WH/ACR
LED Flush Mount
White Finish
Acrylic Lens
12''L x 12''W x 3.25''H
1 x 16 W SSL Dedicated LED (Included)
1000 Delivered Lumens
3000K, 90 CRI, 120v
Dimmable
Damp Location
UL (US/Canada) Listed
JA8-2016/Title 24 Listed

GRANADA

49981LEDD-SAT/ACR
Satin Finish

49981LEDD-WH/ACR
White Finish

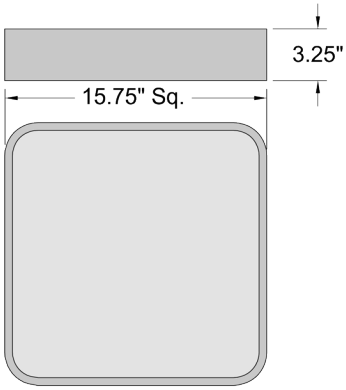

49981LEDD-BL/ACR
LED Flush Mount
Black Finish
Acrylic Lens
15.75''L x 15.75''W x 3.25''H
1 x 24 W SSL Dedicated LED (Included)
1520 Delivered Lumens
3000K, 90 CRI, 120v
Dimmable
Damp Location
UL (US/Canada) Listed
JA8-2016/Title 24 Listed

49982LEDD-BL/ACR
Black Finish

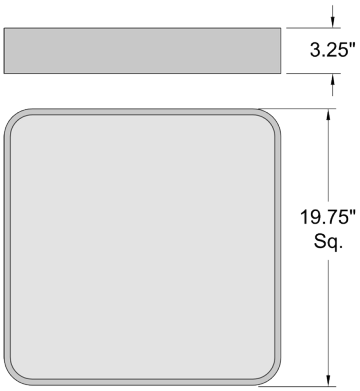

49982LEDD-SAT/ACR
LED Flush Mount
Satin Finish
Acrylic Lens
19.75''L x 19.75''W x 3.25''H
1 x 40 W SSL Dedicated LED (Included)
2688 Delivered Lumens
3000K, 90 CRI, 120v
Dimmable
Damp Location
UL (US/Canada) Listed
JA8-2016/Title 24 Listed

49982LEDD-WH/ACR
White Finish

BEAT

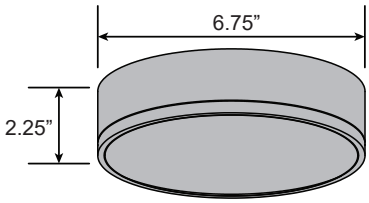

50004LEDD-WH/ACR

Dual Voltage LED Flush Mount

White Finish
Acrylic Lens
6.75’’DIA. x 2.25’’H
1 x 20 W SSL Dedicated LED (Included)
1498 Delivered Lumens
3000K, 80 CRI, 120-277v
Dimmable
Damp Location
UL (US/Canada) Listed

50004LEDD-BL/ACR
Black Finish

REEL

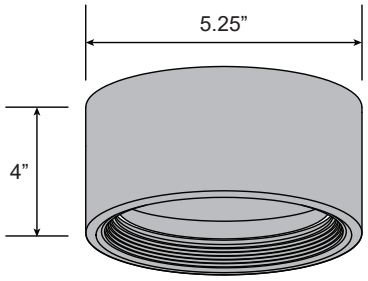

50005LEDD-WH/ACR
White Finish

50005LEDD-BL/ACR
Dual Voltage LED Flush Mount
Black Finish
Acrylic Lens
5.25’’DIA. x 4’’H
1 x 15 W SSL Dedicated LED (Included)
819 Delivered Lumens
3000K, 85 CRI, 120-277v
Dimmable
Damp Location
UL (US/Canada) Listed

REEL

50006LEDD-BL/ACR
Black Finish

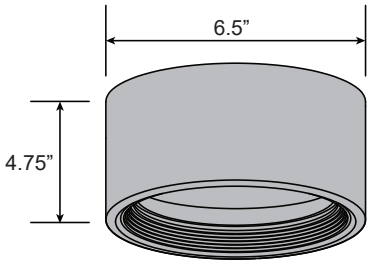

50006LEDD-WH/ACR
Dual Voltage LED Flush Mount
White Finish
Acrylic Lens
6.5’’DIA. x 4.75’’H
1 x 20 W SSL Dedicated LED (Included)
1003 Delivered Lumens
3000K, 85 CRI, 120-277v
Dimmable
Damp Location
UL (US/Canada) Listed

REEL

50007LEDD-WH/ACR
White Finish

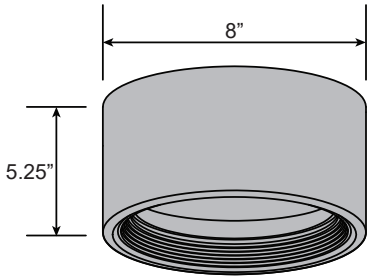

50007LEDD-BL/ACR
Dual Voltage LED Flush Mount
Black Finish
Acrylic Lens
8’’DIA. x 5.25’’H
1 x 30 W SSL Dedicated LED (Included)
1814 Delivered Lumens
3000K, 85 CRI, 120-277v
Dimmable
Damp Location
UL (US/Canada) Listed

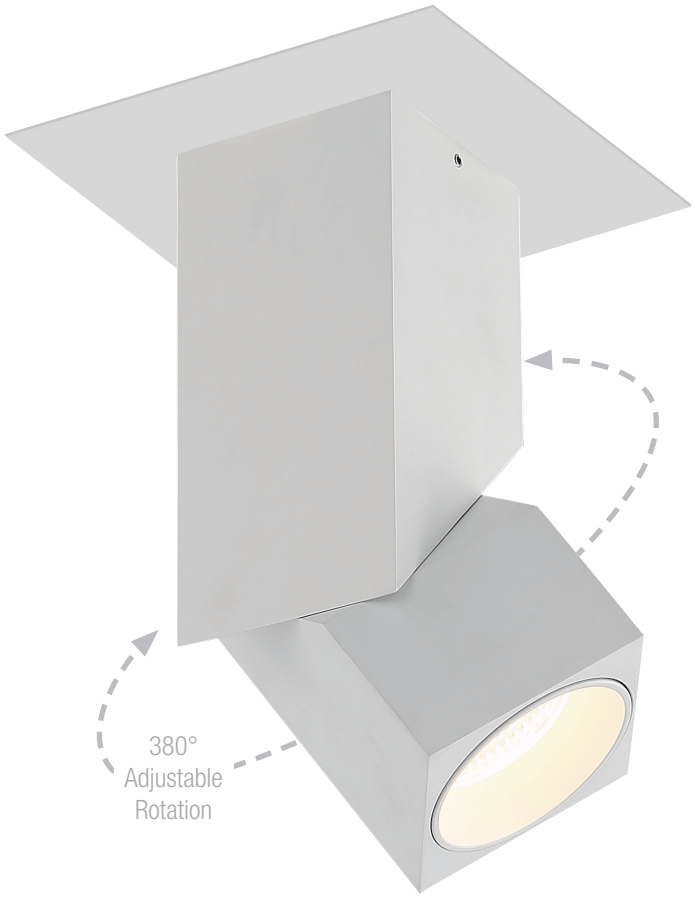

50011LEDD-WH/CLR

Dual Voltage Adjustable LED Flush Mount

White Finish
Clear Glass
3''L x 3''W x 8''H
1 x 11 W SSL Dedicated LED (Included)
985 Delivered Lumens
3000K, 85 CRI, 120-277v
Dimmable
Damp Location
UL (US/Canada) Listed

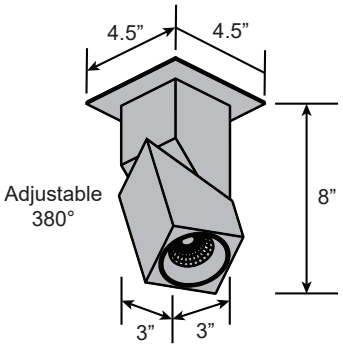

50011LEDD-BL/CLR
Black Finish

BLOC

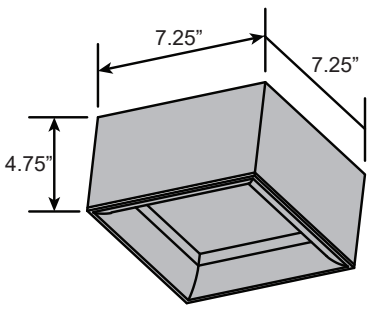

50009LEDD-WH/ACR
White Finish

50009LEDD-BL/ACR
Dual Voltage LED Flush Mount
Black Finish
Acrylic Lens
7.25’’L x 7.25’’W x 4.75’’H
1 x 30 W SSL Dedicated LED (Included)
1539 Delivered Lumens
3000K, 85 CRI, 120-277v
Dimmable
Damp Location
UL (US/Canada) Listed

SQUARED

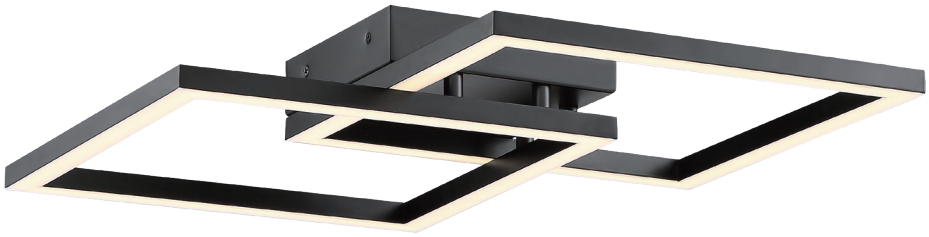

63966LEDD-WH/ACR
White Finish

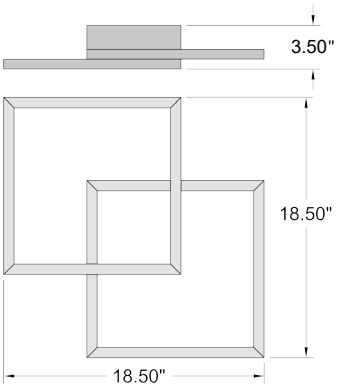

63966LEDD-BL/ACR
LED Flush Mount or Wall Sconce
Black Finish
Acrylic Lens
18.5''L x 18.5''W x 3.5''H
1 x 30 W SSL Dedicated LED (Included)
2400 Nominal Lumens
3000K, 85 CRI, 120v
Dimmable
Damp Location
UL (US/Canada) Listed

SQUARED

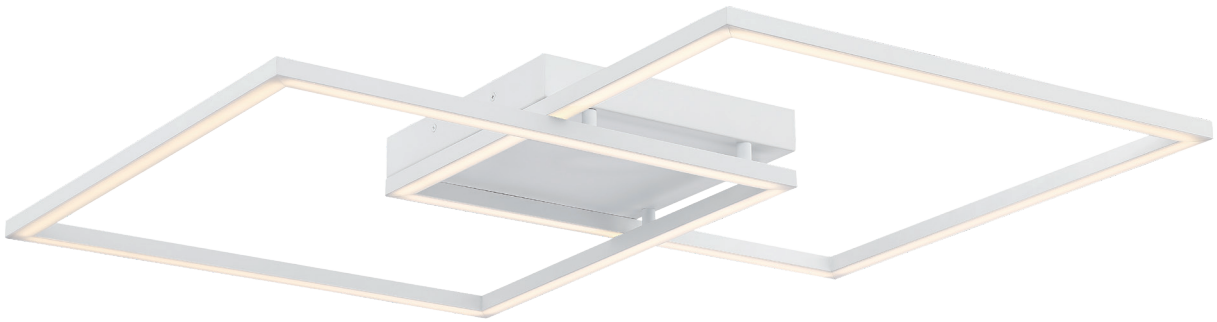

63967LEDD-BL/ACR
Black Finish

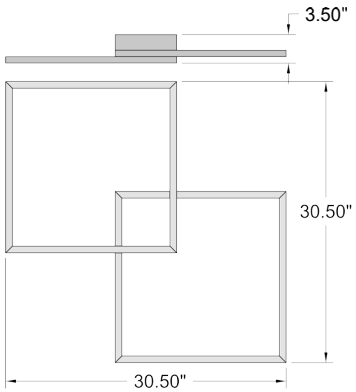

63967LEDD-WH/ACR
LED Flush Mount or Wall Sconce
White Finish
Acrylic Lens
30.5''L x 30.5''W x 3.5''H
1 x 40 W SSL Dedicated LED (Included)
3200 Nominal Lumens
3000K, 85 CRI, 120v
Dimmable
Damp Location
UL (US/Canada) Listed

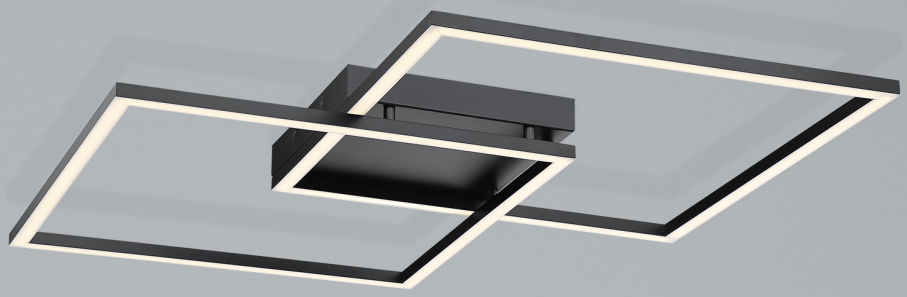

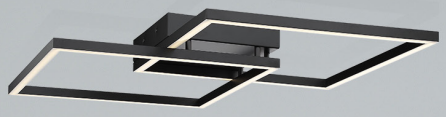

MADRID

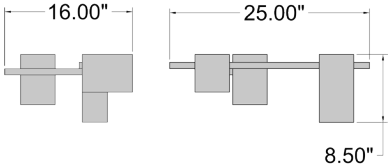

52180LEDD-MBL/ACR
LED Flush Mount
Matte Black Finish
Acrylic Lens
25''L x 16''W x 8.5''H
1 x 24 W SSL Dedicated LED (Included)
1375 Delivered Lumens
3000K, 90 CRI, 120v
Dimmable
Damp Location
UL (US/Canada) Listed

52180LEDD-MWH/ACR
Matte White Finish

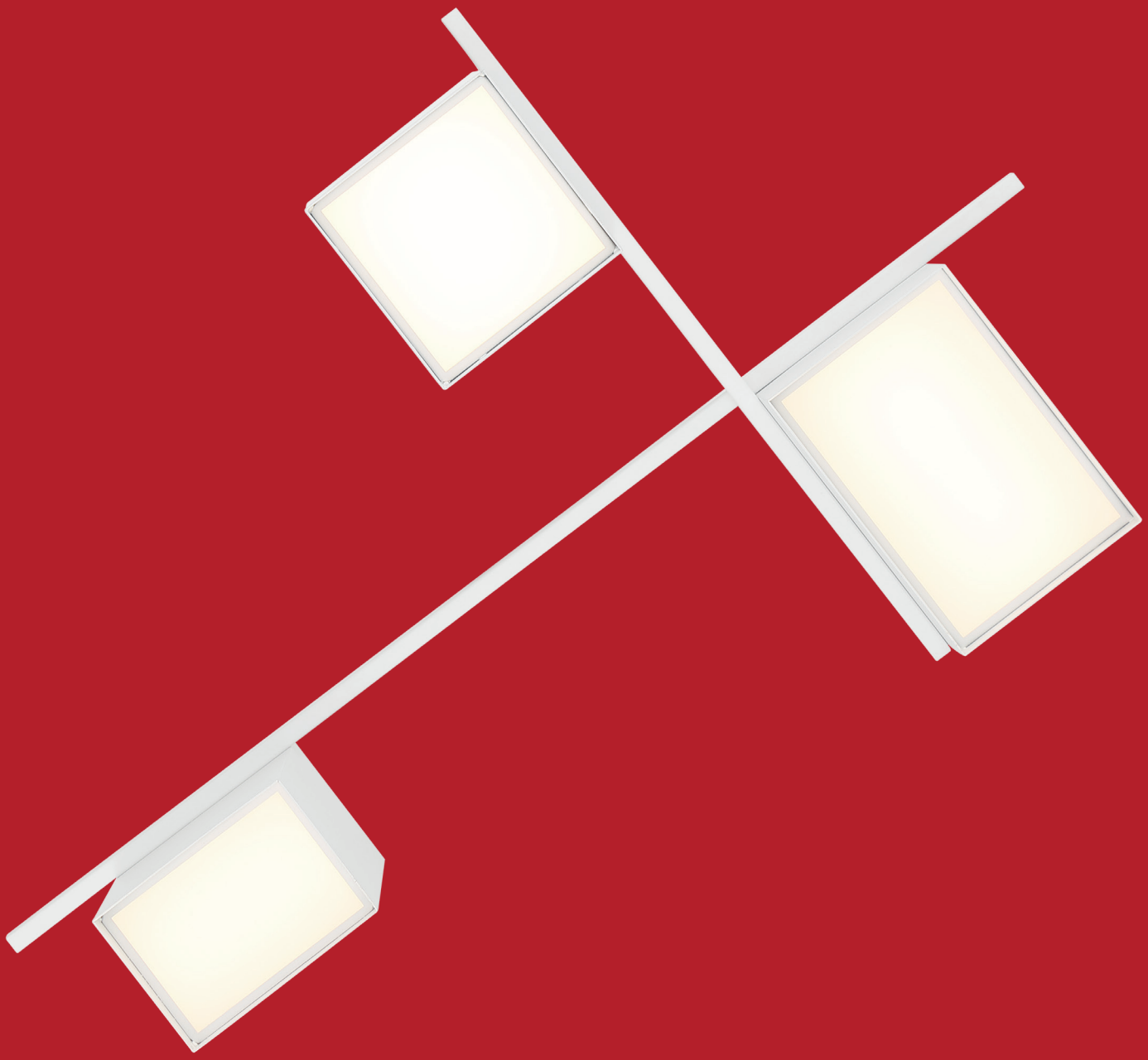

MODPLUS

20830LEDD-BL/ACR
Black Finish

20830LEDD-BS/ACR
Brushed Steel Finish

20830LEDD-CH/ACR
Chrome Finish

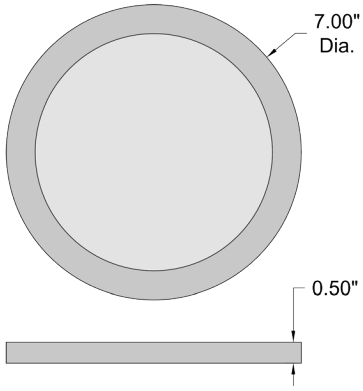

20830LEDD-WH/ACR
LED Flush Mount
White Finish
Acrylic Lens
7''DIA. x 0.5''H
1 x 12 W SSL Dedicated LED (Included)
793 Delivered Lumens
3000K, 90 CRI, 120v
Dimmable
Damp Location
ETL (US/Canada) Listed
JA8-2016/Title 24 Listed

MODPLUS

20831LEDD-BS/ACR
Brushed Steel Finish

20831LEDD-CH/ACR
Chrome Finish

20831LEDD-WH/ACR
White Finish

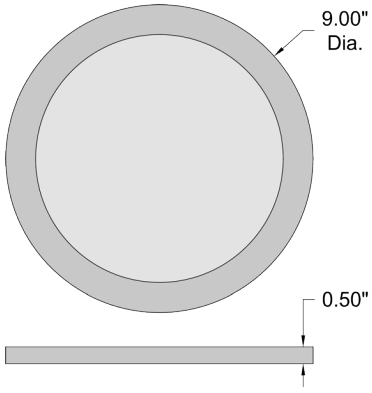

20831LEDD-BL/ACR
LED Flush Mount
Black Finish
Acrylic Lens
9''DIA. x 0.5''H
1 x 18 W SSL Dedicated LED (Included)
1073 Delivered Lumens
3000K, 90 CRI, 120v
Dimmable
Damp Location
ETL (US/Canada) Listed
JA8-2016/Title 24 Listed

20832LEDD-BL/ACR
Black Finish

20832LEDD-BS/ACR
Brushed Steel Finish

20832LEDD-WH/ACR
White Finish

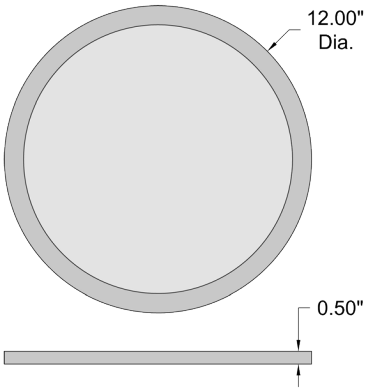

20832LEDD-CH/ACR

LED Flush Mount
Chrome Finish
Acrylic Lens
12''DIA. x 0.5''H
1 x 24 W SSL Dedicated LED (Included)
1532 Delivered Lumens
3000K, 90 CRI, 120v
Dimmable
Damp Location
ETL (US/Canada) Listed
JA8-2016/Title 24 Listed

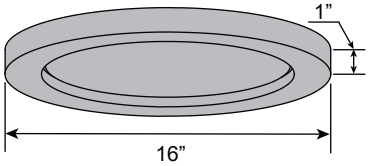

20848LEDD-WH/ACR

LED Flush Mount

White Finish
Acrylic Lens
16’’DIA. x 1’’H
1 x 30 W SSL Dedicated LED (Included)
2843 Delivered Lumens
3000K, 85 CRI, 120v
Dimmable
Damp Location
ETL (US/Canada) Listed

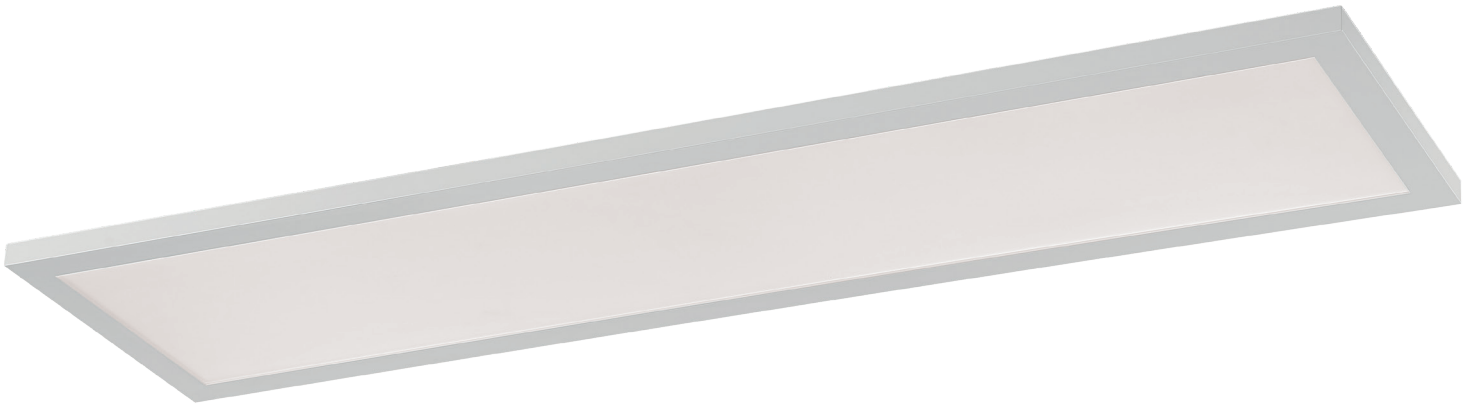

20860LEDD-WH/ACR

LED Flat Panel

White Finish
Acrylic Lens
48''L x 12''W x .75''H
1 x 40 W SSL Dedicated LED (Included)
3600 Nominal Lumens
3000K, 90 CRI, 120v
Dimmable
Damp Location
UL (US/Canada) Listed
JA8-2016/Title 24 Listed

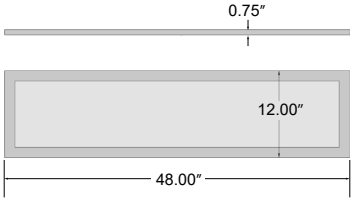

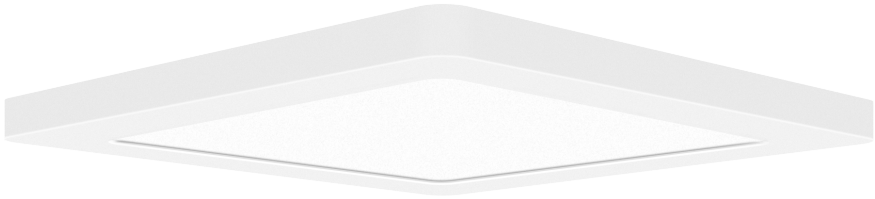

20834LEDD-BL/ACR
Black Finish

20834LEDD-BS/ACR
Brushed Steel Finish

20834LEDD-CH/ACR
Chrome Finish

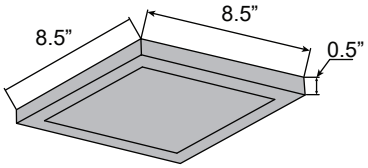

20834LEDD-WH/ACR
LED Flush Mount
White Finish
Acrylic Lens
8.5’’L x 8.5’’W x 0.5’’H
1 x 18 W SSL Dedicated LED (Included)
1212 Delivered Lumens
3000K, 90 CRI, 120v
Dimmable
Damp Location
ETL (US/Canada) Listed
JA8-2016/Title 24 Listed

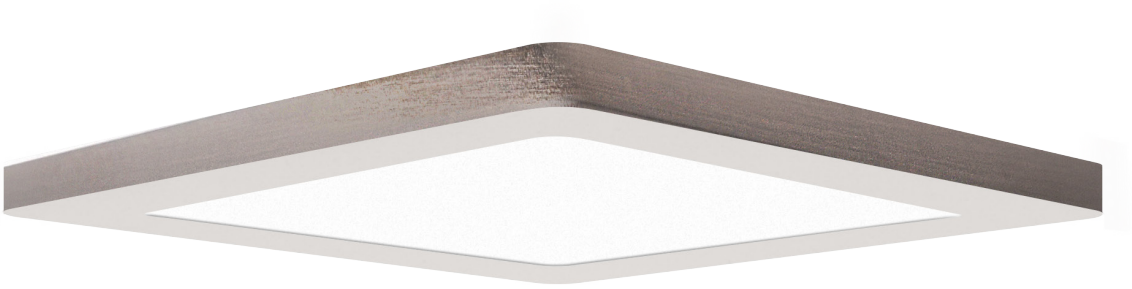

20835LEDD-BL/ACR
Black Finish

20835LEDD-CH/ACR
Chrome Finish

20835LEDD-WH/ACR
White Finish

20835LEDD-BS/ACR

LED Flush Mount
Brushed Steel Finish
Acrylic Lens
11.5''L x 11.5''W x 0.5''H
1 x 24 W SSL Dedicated LED (Included)
1510 Delivered Lumens
3000K, 90 CRI, 120v
Dimmable
Damp Location
ETL (US/Canada) Listed
JA8-2016/Title 24 Listed

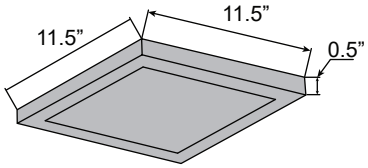

MODPLUS
120-277V

20836LEDD-BS/ACR
Brushed Steel Finish

20836LEDD-CH/ACR
Chrome Finish

20836LEDD-WH/ACR
White Finish

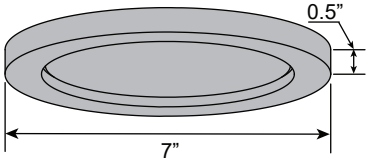

20836LEDD-BL/ACR
Dual Voltage LED Flush Mount
Brushed Steel Finish
Acrylic Lens
7’’DIA. x 0.5’’H
1 x 12 W SSL Dedicated LED (Included)
871 Delivered Lumens
3000K, 80 CRI, 120-277v
0-10v Dimmable
Damp Location
ETL (US/Canada) Listed

MODPLUS
120-277V

20837LEDD-BL/ACR
Black Finish

20837LEDD-BS/ACR
Brushed Steel Finish

20837LEDD-CH/ACR
Chrome Finish

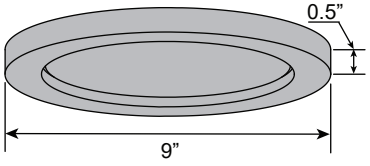

20837LEDD-WH/ACR
Dual Voltage LED Flush Mount
White Finish
Acrylic Lens
9’’DIA. x 0.5’’H
1 x 18 W SSL Dedicated LED (Included)
1263 Delivered Lumens
3000K, 80 CRI, 120-277v
0-10v Dimmable
Damp Location
ETL (US/Canada) Listed

20838LEDD-CH/ACR

Dual Voltage LED Flush Mount

Chrome Finish
Acrylic Lens
12''DIA. x 0.5''H
1 x 24 W SSL Dedicated LED (Included)
1726 Delivered Lumens
3000K, 90 CRI, 120-277v
0-10v Dimmable
Damp Location
ETL (US/Canada) Listed

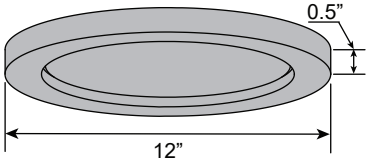

20838LEDD-BL/ACR
Black Finish

20838LEDD-BS/ACR
Brushed Steel Finish

20838LEDD-WH/ACR
White Finish

MODPLUS
120-277V

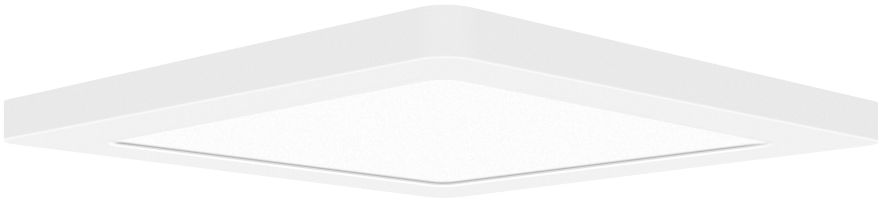

20840LEDD-BL/ACR
Black Finish

20840LEDD-BS/ACR
Brushed Steel Finish

20840LEDD-CH/ACR
Chrome Finish

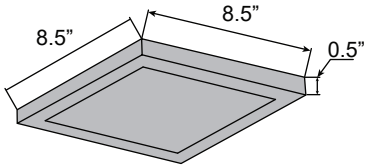

20840LEDD-WH/ACR
Dual Voltage LED Flush Mount
White Finish
Acrylic Lens
8.5’’L x 8.5’’W x 0.5’’H
1 x 18 W SSL Dedicated LED (Included)
1463 Delivered Lumens
3000K, 80 CRI, 120-277v
0-10v Dimmable
Damp Location
ETL (US/Canada) Listed

20841LEDD-BS/ACR
Brushed Steel Finish

20841LEDD-CH/ACR
Chrome Finish

20841LEDD-WH/ACR
White Finish

20841LEDD-BL/ACR

Dual Voltage LED Flush Mount

Black Finish
Acrylic Lens
11.5''L x 11.5''W x 0.5''H
1 x 24 W SSL Dedicated LED (Included)
1947 Delivered Lumens
3000K, 80 CRI, 120-277v
0-10v Dimmable
Damp Location
ETL (US/Canada) Listed

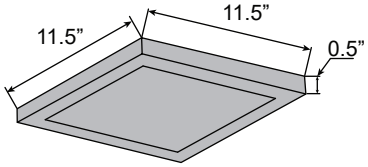

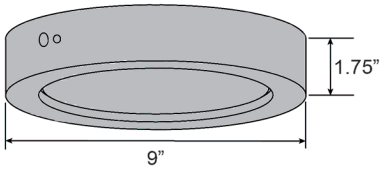

20850LEDEM-WH/ACR

Dual Voltage Emergency Backup LED Flush Mount

White Finish
Acrylic Lens
9’’DIA. x 1.75’’H
1 x 18 W SSL Dedicated LED (Included)
1243 Delivered Lumens
3000K, 90 CRI, 120-277v
Damp Location
ETL (US/Canada) Listed
Emergency Lighting
90 Minutes of Battery Life Minimum
on 24 Hour Battery Charge
Test Button and Charging Indicator
2 Branch Circuit Connections

20849LEDD-WH/ACR

LED Flush Mount

White Finish
Acrylic Lens
9''DIA. x 1.75''H
1 x 18 W SSL Dedicated LED (Included)
1073 Delivered Lumens
3000K, 90 CRI, 120v
Dimmable
Damp Location
ETL (US/Canada) Listed
JA8-2016/Title 24 Listed
Matches Height of Emergency Backup (20850LEDEM)

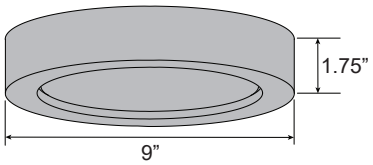

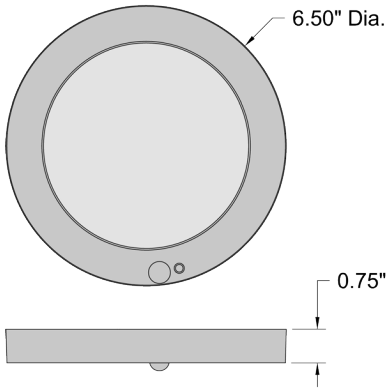

20852LEDMS-WH/ACR

Motion Sensor LED Flush Mount

White Finish
Acrylic Lens
6.5''DIA. x .75''H
1 x 12 W SSL Dedicated LED (Included)
970 Delivered Lumens
3000K, 90 CRI, 120-277v
Damp Location
ETL (US/Canada) Listed
15 Foot Motion Detection Range
Day / Night Mode Switch

20851LEDMS-WH/ACR

Motion Sensor LED Flush Mount

White Finish
Acrylic Lens
9''DIA. x 0.75''H
1 x 18 W SSL Dedicated LED (Included)
1266 Delivered Lumens
3000K, 85 CRI, 120v
Damp Location
ETL (US/Canada) Listed
15 Foot Motion Detection Range
Day / Night Mode Switch

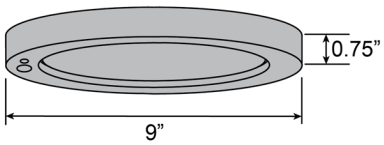

MODPLUS
3 CCT SELECTABLE

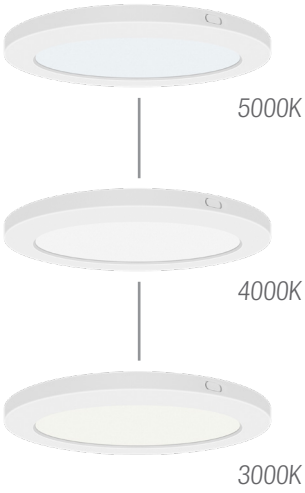

3 Colors in 1 Light

20830LEDDCS-BS/ACR
Brushed Steel Finish

3 CCT Selectable Switch
Located on Backside

20830LEDDCS-CH/ACR
Chrome Finish

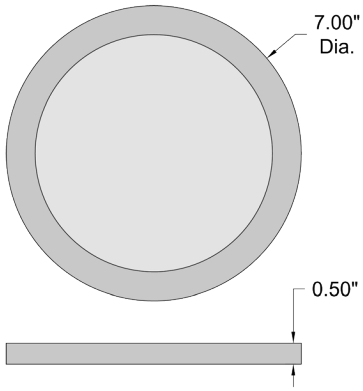

20830LEDDCS-WH/ACR
White Finish

20830LEDDCS-BL/ACR
3CCT LED Flush Mount
Black Finish
Acrylic Lens
7''DIA. x 0.5''H
1 x 12 W SSL Dedicated LED (Included)
751 Delivered Lumens
3K/4K/5K, 90 CRI, 120v
Dimmable
Damp Location
ETL (US/Canada) Listed
JA8-2016/Title 24 Listed
3 Selectable Color Temperatures; 3000K, 4000K, 5000K

20831LEDDCS-BL/ACR
Black Finish

20831LEDDCS-BS/ACR
Brushed Steel Finish

20831LEDDCS-CH/ACR
Chrome Finish

20831LEDDCS-WH/ACR

3CCT LED Flush Mount
White Finish
Acrylic Lens
9''DIA. x 0.5''H
1 x 18 W SSL Dedicated LED (Included)
1280 Delivered Lumens
3K/4K/5K, 90 CRI, 120v
Dimmable
Damp Location
ETL (US/Canada) Listed
JA8-2016/Title 24 Listed
3 Selectable Color Temperatures; 3000K, 4000K, 5000K

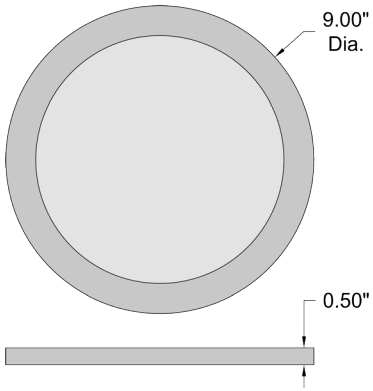

MODPLUS
3 CCT SELECTABLE

20832LEDDCS-BS/ACR
Brushed Steel Finish

20832LEDDCS-CH/ACR
Chrome Finish

20832LEDDCS-WH/ACR
White Finish

20832LEDDCS-BL/ACR

3CCT LED Flush Mount
Black Finish
Acrylic Lens
12''DIA. x 0.5''H
1 x 24 W SSL Dedicated LED (Included)
1799 Delivered Lumens
3K/4K/5K, 90 CRI, 120v
Dimmable
Damp Location
ETL (US/Canada) Listed
JA8-2016/Title 24 Listed
3 Selectable Color Temperatures; 3000K, 4000K, 5000K

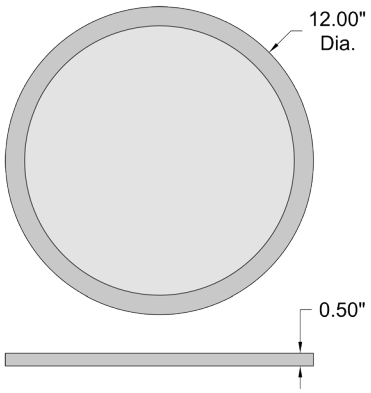

MID TOWN

64063LEDDLP-BS/WH
Brushed Steel Finish

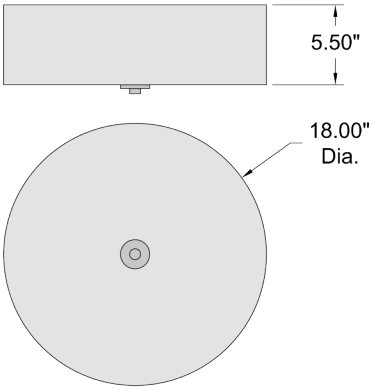

64063LEDDLP-ABB/WH
LED Flush Mount
Antique Brushed Brass Finish
Fabric Shade with Frosted Glass Diffuser
18''DIA. x 5.5''H
3 x 10 W E-26 Replaceable LED (Included)
2123 Delivered Lumens
3000K, 90 CRI, 120v
Dimmable
Dry Location
UL (US/Canada) Listed
JA8-2016/Title 24 Listed, Title 20

MID TOWN

64064LEDDLP-ABB/WH
Antique Brushed Brass Finish

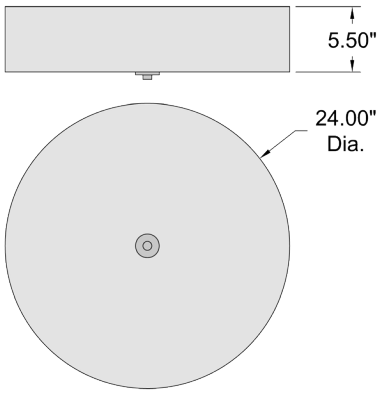

64064LEDDLP-BS/WH
LED Flush Mount
Brushed Steel Finish
Fabric Shade with Frosted Glass Diffuser
24''DIA. x 5.5''H
4 x 10 W E-26 Replaceable LED (Included)
2775 Delivered Lumens
3000K, 90 CRI, 120v
Dimmable
Dry Location
UL (US/Canada) Listed
JA8-2016/Title 24 Listed, Title 20

20820LEDD-BS/ACR

LED Flush Mount

Brushed Steel Accents
Fabric Shade with Frosted Acrylic Diffuser
16''DIA. x 5.25''H
1 x 23 W SSL Dedicated LED (Included)
1299 Delivered Lumens
3000K, 90 CRI, 120v
Dimmable
Damp Location
ETL (US/Canada) Listed
JA8-2016/Title 24 Listed

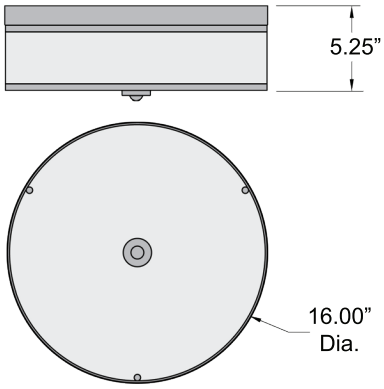

MIA

20821LEDD-BS/ACR

LED Flush Mount

Brushed Steel Accents
Fabric Shade with Frosted Acrylic Diffuser
18''DIA. x 5.25''H
1 x 28 W SSL Dedicated LED (Included)
1703 Delivered Lumens
3000K, 90 CRI, 120v
Dimmable
Damp Location
ETL (US/Canada) Listed
JA8-2016/Title 24 Listed

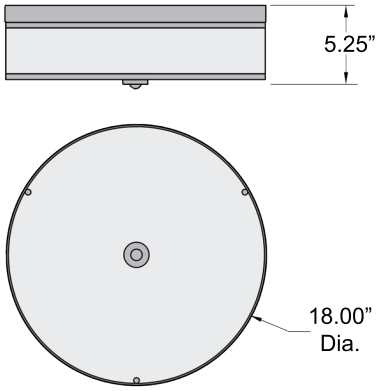

VISION

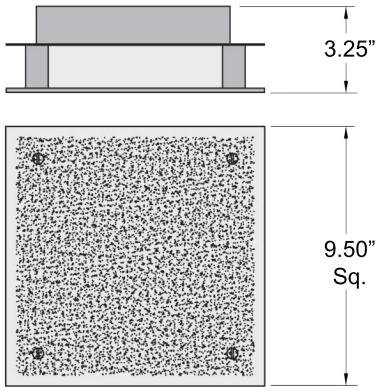

50030-BS/FST

Flush Mount

Brushed Steel Finish
Frosted Glass
9.5’’L x 9.5’’W x 3.25’’H
1 x 200 W R7s Halogen (Included)
3200 Nominal Lumens
2900K, 120v
Dimmable
Damp Location
ETL (US/Canada) Listed

VISION

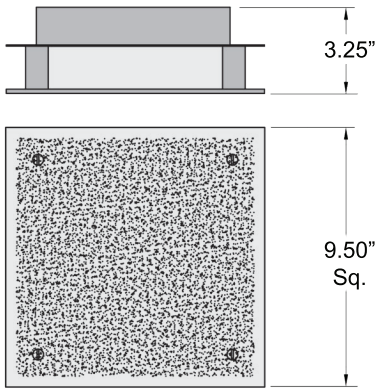

50030LEDD-BS/FST

LED Flush Mount

Brushed Steel Finish
Frosted Glass
9.5’’L x 9.5’’W x 3.25’’H
1 x 17 W SSL Dedicated LED (Included)
900 Delivered Lumens
3000K, 90 CRI, 120v
Dimmable
Damp Location
UL (US/Canada) Listed
Energy Star, JA8-2016/Title 24 Listed

50031-BS/FST

Flush Mount

Brushed Steel Finish
Frosted Glass
12''L x 12''W x 3.25''H
1 x 200 W R7s Halogen (Included)
3200 Nominal Lumens
2900K, 120v
Dimmable
Damp Location
ETL (US/Canada) Listed

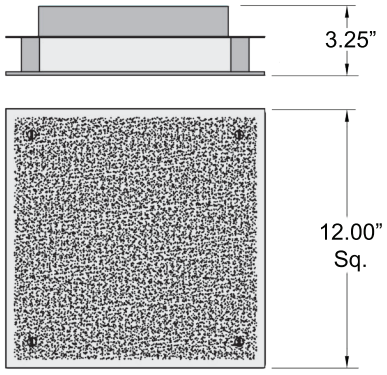

VISION

50031LEDD-BS/FST

LED Flush Mount

Brushed Steel Finish
Frosted Glass
12''L x 12''W x 3.25''H
1 x 17 W SSL Dedicated LED (Included)
930 Delivered Lumens
3000K, 90 CRI, 120v
Dimmable
Damp Location
UL (US/Canada) Listed
Energy Star, JA8-2016/Title 24 Listed

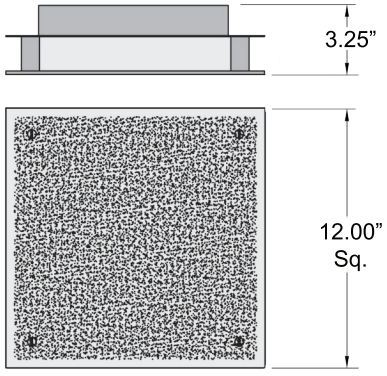

VISION

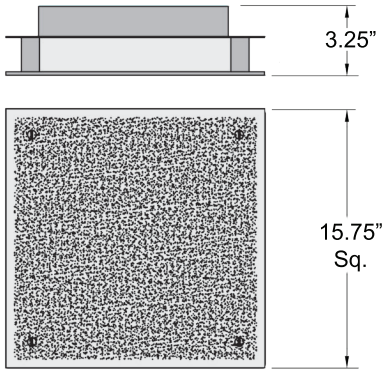

50032-BS/FST

Flush Mount

Brushed Steel Finish
Frosted Glass
15.75’’L x 15.75’’W x 3.25’’H
2 x 150 W R7s Halogen (Included)
5200 Nominal Lumens
2900K, 120v
Dimmable
Damp Location
ETL (US/Canada) Listed

VISION

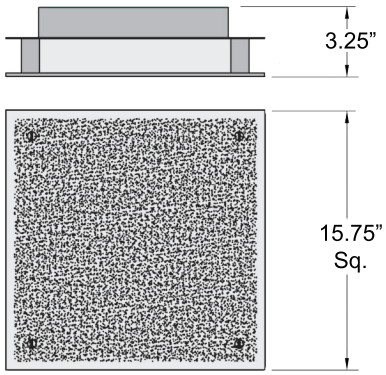

50032LEDD-BS/FST

LED Flush Mount

Brushed Steel Finish
Frosted Glass
15.75’’L x 15.75’’W x 3.25’’H
1 x 30 W SSL Dedicated LED (Included)
1810 Delivered Lumens
3000K, 90 CRI, 120v
Dimmable
Damp Location
UL (US/Canada) Listed
Energy Star, JA8-2016/Title 24 Listed

VISION ROUND

50036LEDD-BS/FST

LED Flush Mount

Brushed Steel Finish
Frosted Glass
10''DIA. x 3.25''H
1 x 17 W SSL Dedicated LED (Included)
915 Delivered Lumens
3000K, 90 CRI, 120v
Dimmable
Damp Location
UL (US/Canada) Listed
Energy Star, JA8-2016/Title 24 Listed

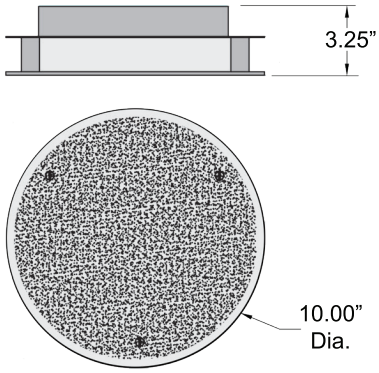

VISION ROUND

50038LEDD-BS/FST

LED Flush Mount

Brushed Steel Finish
Frosted Glass
15.75''DIA. x 3.25''H
1 x 30 W SSL Dedicated LED (Included)
1745 Delivered Lumens
3000K, 90 CRI, 120v
Dimmable
Damp Location
UL (US/Canada) Listed
Energy Star, JA8-2016/Title 24 Listed

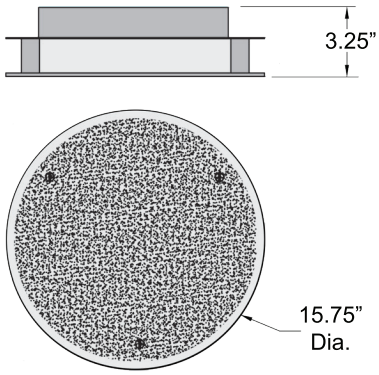

TARA

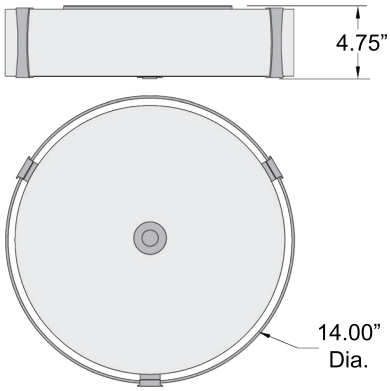

50120-BS/OPL

Flush Mount

Brushed Steel Finish
Opal Glass
14’’DIA. x 4.75’’H
3 x 60 W E-26 Incandescent
120v
Dimmable
Damp Location
UL (US/Canada) Listed

TARA

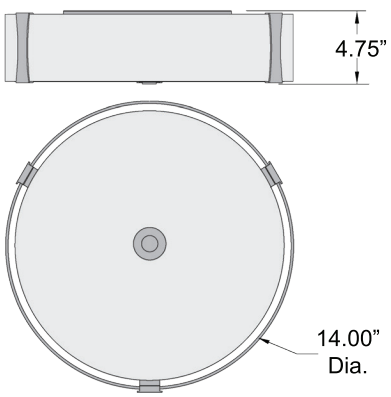

50120LEDDLP-BS/OPL

LED Flush Mount

Brushed Steel Finish
Opal Glass
14’’DIA. x 4.75’’H
3 x 10 W E-26 Replaceable LED (Included)
2400 Nominal Lumens
3000K, 90 CRI, 120v
Dimmable
Damp Location
UL (US/Canada) Listed
JA8-2016/Title 24 Listed, Title 20

50120LEDD-BS/OPL

LED Flush Mount

Brushed Steel Finish
Opal Glass
14''DIA. x 4.75''H
1 x 17 W SSL Dedicated LED (Included)
1069 Delivered Lumens
3000K, 90 CRI, 120v
Dimmable
Damp Location
UL (US/Canada) Listed
Energy Star

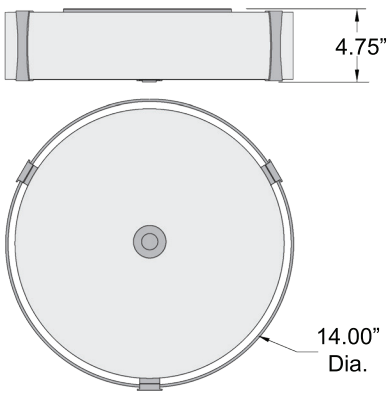

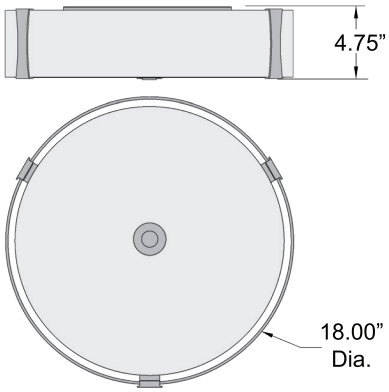

50121-BS/OPL

Flush Mount

Brushed Steel Finish

Opal Glass

18’’DIA. x 4.75’’H

3 x 75 W E-26 Incandescent

120v

Dimmable

Damp Location

UL (US/Canada) Listed

50121LEDD-BS/OPL

LED Flush Mount

Brushed Steel Finish
Opal Glass
18''DIA. x 4.75''H
1 x 30 W SSL Dedicated LED (Included)
2017 Delivered Lumens
3000K, 90 CRI, 120v
Dimmable
Damp Location
UL (US/Canada) Listed
Energy Star, JA8-2016/Title 24 Listed

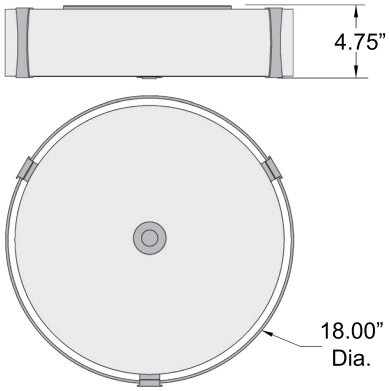

TARA

50121LEDDLP-BS/OPL

LED Flush Mount

Brushed Steel Finish
Opal Glass
18''DIA. x 4.75''H
3 x 10 W E-26 Replaceable LED (Included)
2400 Nominal Lumens
3000K, 90 CRI, 120v
Dimmable
Damp Location
UL (US/Canada) Listed
JA8-2016/Title 24 Listed, Title 20

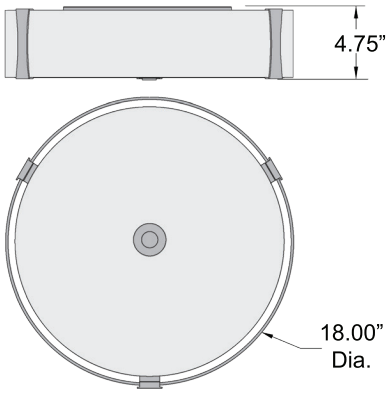

AERO

20670-BS/OPL
Brushed Steel Finish

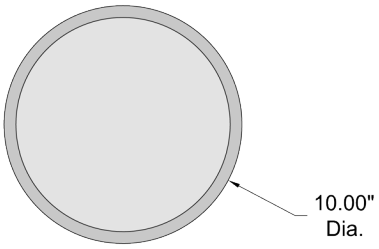

20670-CH/OPL
Flush Mount
Chrome Finish
Opal Glass
10''DIA. x 4''H
1 x 75 W E-26 Incandescent
120v
Dimmable
Damp Location
UL (US/Canada) Listed

AERO

20670LEDDLP-CH/OPL
Chrome Finish

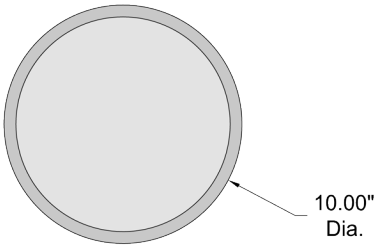

20670LEDDLP-BS/OPL
LED Flush Mount
Chrome Finish
Opal Glass
10''DIA. x 4''H
1 x 10 W E-26 Replaceable LED (Included)
800 Nominal Lumens
3000K, 90 CRI, 120v
Dimmable
Damp Location
UL (US/Canada) Listed
JA8-2016/Title 24 Listed, Title 20

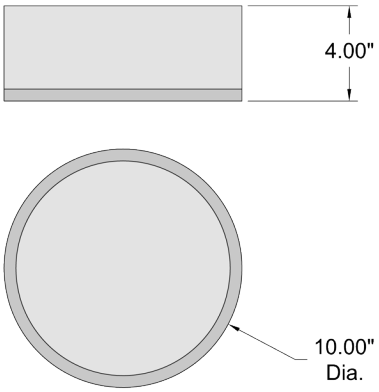

20670LEDD-CH/OPL

LED Flush Mount

Chrome Finish
Opal Glass
10''DIA. x 4''H
1 x 17 W SSL Dedicated LED (Included)
1440 Nominal Lumens
3000K, 90 CRI, 120v
Dimmable
Damp Location
UL (US/Canada) Listed
Energy Star

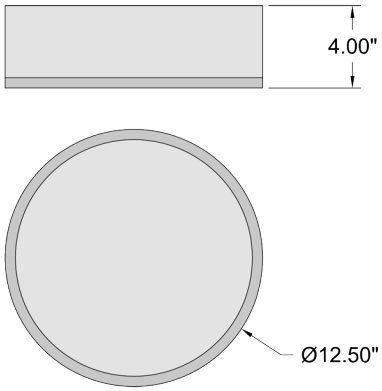

20671-CH/OPL

Flush Mount

Chrome Finish

Opal Glass

12.5''DIA. x 4''H

2 x 60 W E-26 Incandescent

120v

Dimmable

Damp Location

UL (US/Canada) Listed

20671LEDDLP-CH/OPL

LED Flush Mount

Chrome Finish
Opal Glass
12.5''DIA. x 4''H
2 x 10 W E-26 Replaceable LED (Included)
1600 Nominal Lumens
3000K, 90 CRI, 120v
Dimmable
Damp Location
UL (US/Canada) Listed
JA8-2016/Title 24 Listed, Title 20

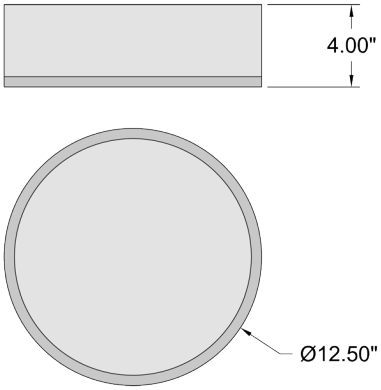

AERO

20671LEDD-CH/OPL

LED Flush Mount

Chrome Finish
Opal Glass
12.5''DIA. x 4''H
1 x 17 W SSL Dedicated LED (Included)
1002 Delivered Lumens
3000K, 90 CRI, 120v
Dimmable
Damp Location
UL (US/Canada) Listed
Energy Star

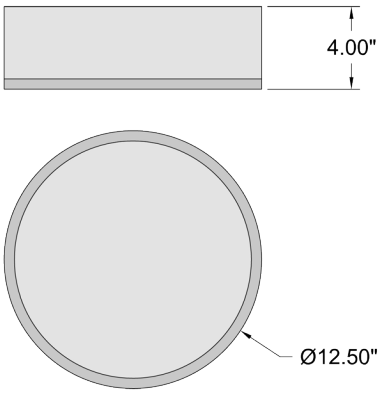

AERO

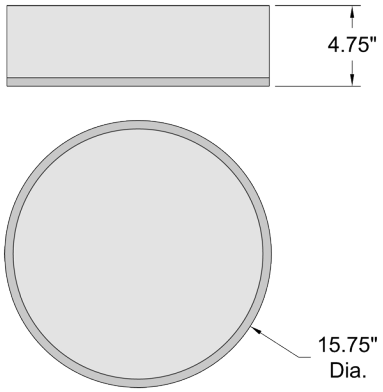

20672-CH/OPL

Flush Mount

Chrome Finish
Opal Glass
15.75''DIA. x 4.75''H
3 x 60 W E-26 Incandescent
120v
Dimmable
Damp Location
UL (US/Canada) Listed

AERO

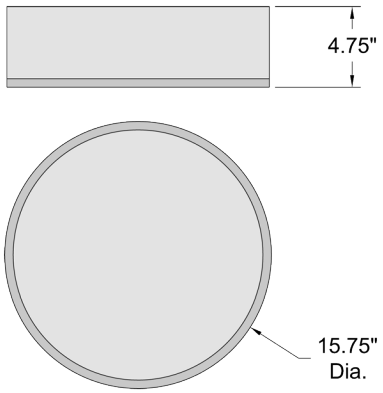

20672LEDDLP-CH/OPL

LED Flush Mount

Chrome Finish
Opal Glass
15.75''DIA. x 4.75''H
3 x 10 W E-26 Replaceable LED (Included)
2400 Nominal Lumens
3000K, 90 CRI, 120v
Dimmable
Damp Location
UL (US/Canada) Listed
JA8-2016/Title 24 Listed, Title 20

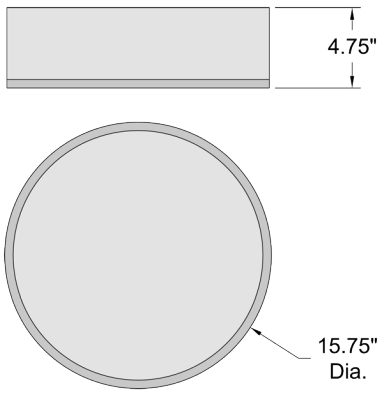

20672LEDD-CH/OPL

LED Flush Mount

Chrome Finish
Opal Glass
15.75''DIA. x 4.75''H
1 x 30 W SSL Dedicated LED (Included)
1992 Delivered Lumens
3000K, 90 CRI, 120v
Dimmable
Damp Location
UL (US/Canada) Listed
Energy Star

CONGA

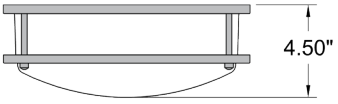

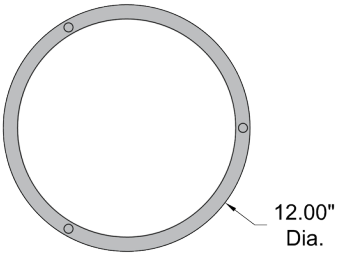

50079-BRZ/OPL
Bronze Finish

50079-BS/OPL
Flush Mount
Brushed Steel Finish
Opal Glass
12''DIA. x 4.5''H
1 x 100 W E-26 Incandescent
120v
Dimmable
Damp Location
ETL (US/Canada) Listed

50079LEDDLP-BS/OPL

LED Flush Mount

Brushed Steel Finish
Opal Glass
12''DIA. x 4.5''H
1 x 10 W E-26 Replaceable LED (Included)
800 Nominal Lumens
3000K, 90 CRI, 120v
Dimmable
Damp Location
UL (US/Canada) Listed
JA8-2016/Title 24 Listed, Title 20

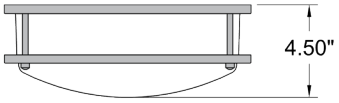

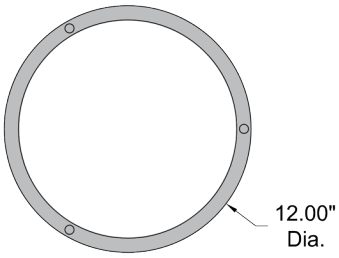

50079LEDDLP-BRZ/OPL
Bronze Finish

CONGA

50079LEDD-BRZ/OPL

LED Flush Mount

Bronze Finish
Opal Glass
12''DIA. x 4.5''H
1 x 17 W SSL Dedicated LED (Included)
959 Delivered Lumens
3000K, 90 CRI, 120v
Dimmable
Damp Location
UL (US/Canada) Listed
Energy Star

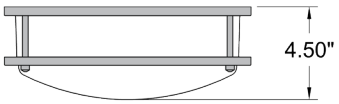

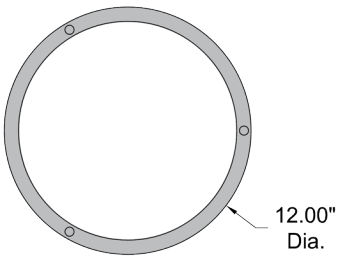

50079LEDD-BS/OPL
Brushed Steel Finish

CONGA

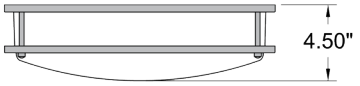

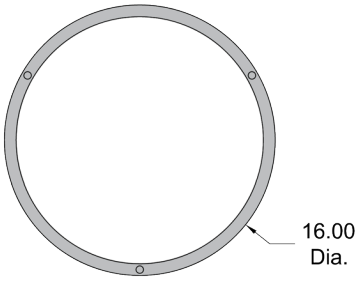

50080-BS/OPL
Brushed Steel Finish

50080-BRZ/OPL
Flush Mount
Bronze Finish
Opal Glass
16''DIA. x 4.5''H
2 x 75 W E-26 Incandescent
120v
Dimmable
Damp Location
ETL (US/Canada) Listed

CONGA

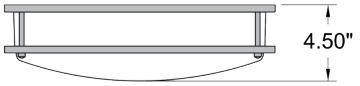

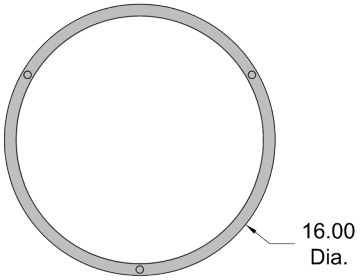

50080LEDDLP-BRZ/OPL
Bronze Finish

50080LEDDLP-BS/OPL
LED Flush Mount
Brushed Steel Finish
Opal Glass
16''DIA. x 4.5''H
2 x 10 W E-26 Replaceable LED (Included)
1600 Nominal Lumens
3000K, 90 CRI, 120v
Dimmable
Damp Location
ETL (US/Canada) Listed
Energy Star, JA8-2016/Title 24 Listed, Title 20

50080LEDD-BRZ/OPL

LED Flush Mount

Bronze Finish
Opal Glass
16''DIA. x 4.5''H
1 x 17 W SSL Dedicated LED (Included)
847 Delivered Lumens
3000K, 90 CRI, 120v
Dimmable
Damp Location
UL (US/Canada) Listed
Energy Star

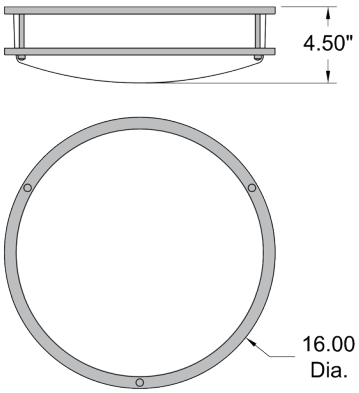

50080LEDD-BS/OPL
Brushed Steel Finish

CONGA

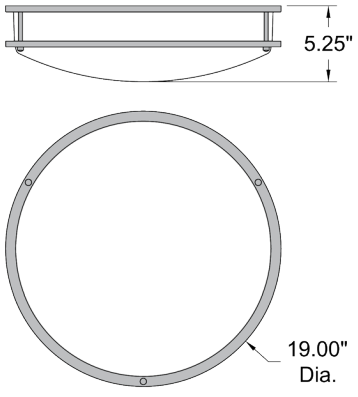

50081-BRZ/OPL
Bronze Finish

50081-BS/OPL
Flush Mount
Brushed Steel Finish
Opal Glass
19''DIA. x 5.25''H
3 x 75 W E-26 Incandescent
120v
Dimmable
Damp Location
ETL (US/Canada) Listed

50081LEDDLP-BRZ/OPL

LED Flush Mount

Bronze Finish
Opal Glass
19''DIA. x 5.25''H
3 x 10 W E-26 Replaceable LED (Included)
2400 Nominal Lumens
3000K, 90 CRI, 120v
Dimmable
Damp Location
ETL (US/Canada) Listed
Energy Star, JA8-2016/Title 24 Listed, Title 20

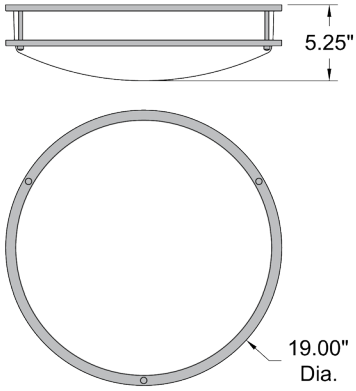

50081LEDDLP-BS/OPL
Brushed Steel Finish

CONGA

50081LEDD-BS/OPL

LED Flush Mount

Brushed Steel Finish
Opal Glass
19''DIA. x 5.25''H
1 x 30 W SSL Dedicated LED (Included)
1423 Delivered Lumens
3000K, 90 CRI, 120v
Dimmable
Damp Location
UL (US/Canada) Listed
Energy Star, JA8-2016/Title 24 Listed

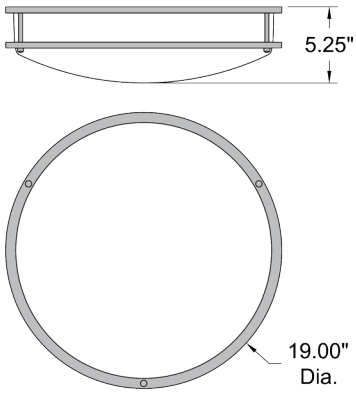

50081LEDD-BRZ/OPL
Bronze Finish

SOLERO II

20500LEDD-BRZ/ACR
Bronze Finish

20500LEDD-CH/ACR
Chrome Finish

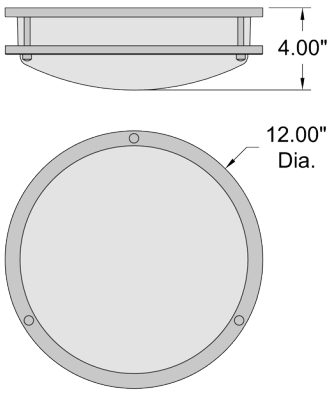

20500LEDD-BS/ACR
LED Flush Mount
Brushed Steel Finish
Acrylic Lens
12''DIA. x 4''H
1 x 20 W SSL Dedicated LED (Included)
1006 Delivered Lumens
3000K, 90 CRI, 120v
Dimmable
Damp Location
ETL (US/Canada) Listed
JA8-2016/Title 24 Listed

20501LEDD-BRZ/ACR
Bronze Finish

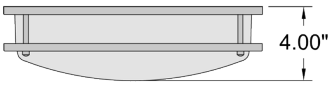

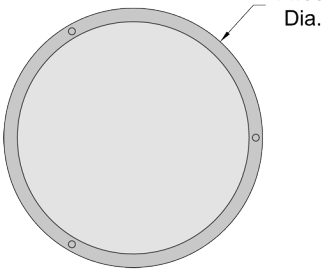

20501LEDD-CH/ACR
LED Flush Mount
Chrome Finish
Acrylic Lens
14''DIA. x 4''H
1 x 26 W SSL Dedicated LED (Included)
1820 Nominal Lumens
3000K, 90 CRI, 120v
Dimmable
Damp Location
ETL (US/Canada) Listed
JA8-2016/Title 24 Listed

20501LEDD-BS/ACR
Brushed Steel Finish

SOLERO II

20502LEDD-BS/ACR
Brushed Steel Finish

20502LEDD-CH/ACR
Chrome Finish

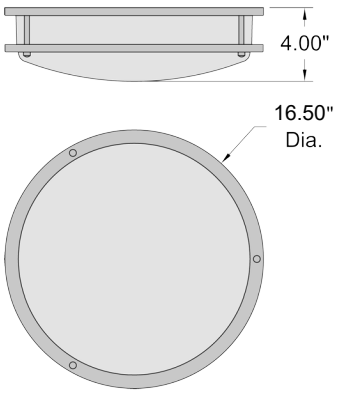

20502LEDD-BRZ/ACR
LED Flush Mount
Bronze Finish
Acrylic Lens
16.5''DIA. x 4''H
1 x 26 W SSL Dedicated LED (Included)
1350 Delivered Lumens
3000K, 90 CRI, 120v
Dimmable
Damp Location
ETL (US/Canada) Listed
JA8-2016/Title 24 Listed

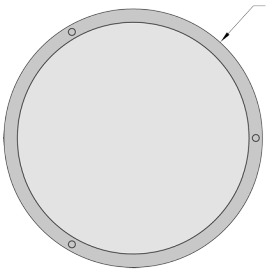

20503LEDD-CH/ACR

LED Flush Mount

Chrome Finish
Acrylic Lens
18.5''DIA. x 4''H
1 x 30 W SSL Dedicated LED (Included)
1586 Delivered Lumens
3000K, 90 CRI, 120v
Dimmable
Damp Location
ETL (US/Canada) Listed
JA8-2016/Title 24 Listed

20503LEDD-BRZ/ACR
Bronze Finish

20503LEDD-BS/ACR
Brushed Steel Finish

SOLERO II

3 CCT SELECTABLE

3 Colors in 1 Light

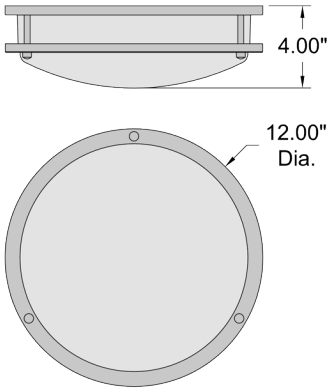

20500LEDDCS-BS/ACR

3CCT LED Flush Mount

Brushed Steel Finish
Acrylic Lens
12''DIA. x 4''H
1 x 20 W SSL Dedicated LED (Included)
1250 Delivered Lumens
3K/4K/5K, 90 CRI, 120v
Dimmable
Damp Location
ETL (US/Canada) Listed
JA8-2016/Title 24 Listed
3 Selectable Color Temperatures; 3000K, 4000K, 5000K

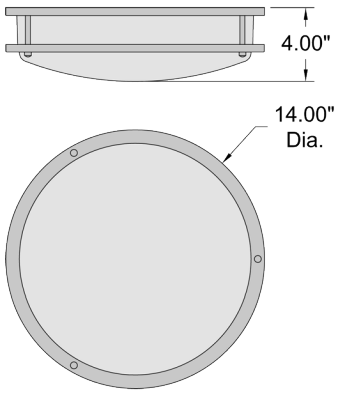

20501LEDDCS-BS/ACR

3CCT LED Flush Mount
Brushed Steel Finish
Acrylic Lens
14''DIA. x 4''H
1 x 26 W SSL Dedicated LED (Included)
1745 Delivered Lumens
3K/4K/5K, 90 CRI, 120v
Dimmable
Damp Location
ETL (US/Canada) Listed
JA8-2016/Title 24 Listed
3 Selectable Color Temperatures; 3000K, 4000K, 5000K

SOLERO

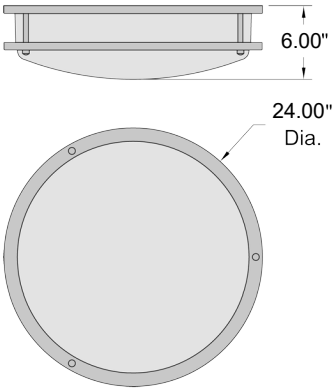

20467LEDD-BRZ/ACR
Bronze Finish

20467LEDD-BS/ACR
LED Flush Mount
Brushed Steel Finish
Acrylic Lens
24''DIA. x 6''H
1 x 35 W SSL Dedicated LED (Included)
2141 Delivered Lumens
3000K, 90 CRI, 120v
Dimmable
Damp Location
ETL (US/Canada) Listed

SOLERO OVAL

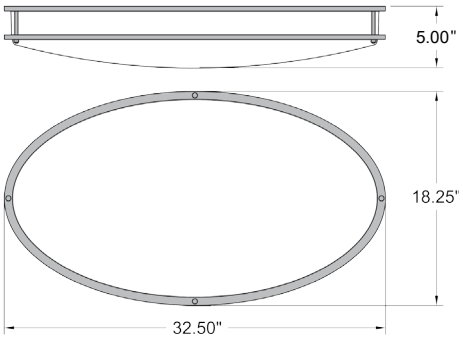

20468LEDD-BRZ/ACR

LED Flush Mount

Bronze Finish
Acrylic Lens
32.50''L x 18.25''W x 5''H
1 x 48 W SSL Dedicated LED (Included)
2916 Delivered Lumens
3000K, 90 CRI, 120v
Dimmable
Damp Location
ETL (US/Canada) Listed
JA8-2016/Title 24 Listed

20468LEDD-BS/ACR
Brushed Steel Finish

20468LEDD-CH/ACR
Chrome Finish

SPARC

20470LEDD-BRZ/SACR
Bronze Finish

20470LEDD-CH/SACR
Chrome Finish

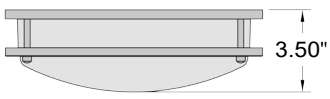

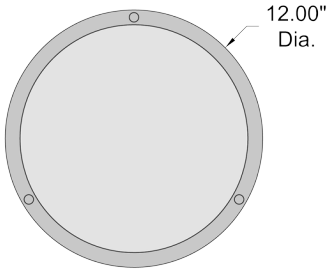

20470LEDD-BS/SACR
LED Flush Mount
Brushed Steel Finish
Starry Acrylic
12''DIA. x 3.5''H
1 x 15 W SSL Dedicated LED (Included)
945 Delivered Lumens
3000K, 90 CRI, 120v
Dimmable
Damp Location
ETL (US/Canada) Listed

20471LEDD-BS/SACR
Brushed Steel Finish

20471LEDD-CH/SACR
Chrome Finish

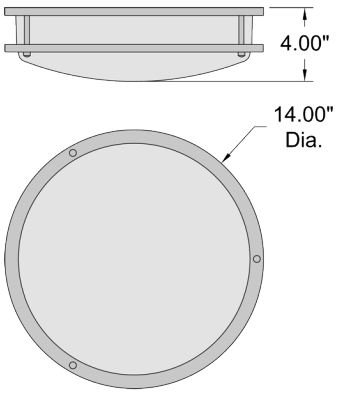

20471LEDD-BRZ/SACR
LED Flush Mount
Bronze Finish
Starry Acrylic
14''DIA. x 4''H
1 x 20 W SSL Dedicated LED (Included)
1376 Delivered Lumens
3000K, 90 CRI, 120v
Dimmable
Damp Location
ETL (US/Canada) Listed

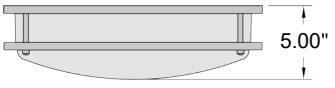

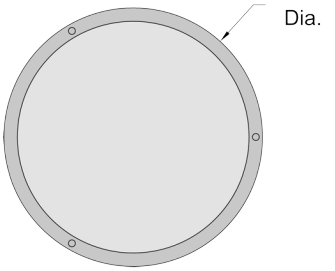

20472LEDD-CH/SACR

LED Flush Mount

Chrome Finish
Starry Acrylic
16''DIA. x 5''H
1 x 25 W SSL Dedicated LED (Included)
1803 Delivered Lumens
3000K,90, 120v
Dimmable
Damp Location
ETL (US/Canada) Listed

20472LEDD-BRZ/SACR
Bronze Finish

20472LEDD-BS/SACR
Brushed Steel Finish

BOXER

20813LEDD-BS/ACR
Brushed Steel Finish

20813LEDD-WH/ACR
White Finish

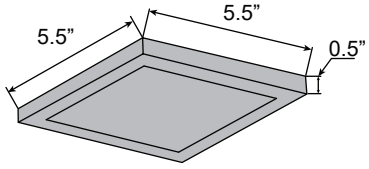

20813LEDD-BRZ/ACR
LED Flush Mount
Bronze Finish
Acrylic Lens
5.5’’L x 5.5’’W x 0.5’’H
1 x 12 W SSL Dedicated LED (Included)
794 Delivered Lumens
3000K, 90 CRI, 120v
Dimmable
Damp Location
ETL (US/Canada) Listed
JA8-2016/Title 24 Listed

20814LEDD-BS/ACR
Brushed Steel Finish

20814LEDD-BRZ/ACR
Bronze Finish

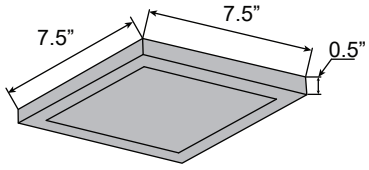

20814LEDD-WH/ACR
LED Flush Mount
White Finish
Acrylic Lens
7.5’’L x 7.5’’W x 0.5’’H
1 x 15 W SSL Dedicated LED (Included)
1044 Delivered Lumens
3000K, 90 CRI, 120v
Dimmable
Damp Location
ETL (US/Canada) Listed
JA8-2016/Title 24 Listed

20815LEDD-BS/ACR
Brushed Steel Finish

20815LEDD-WH/ACR
White Finish

20815LEDD-BRZ/ACR

LED Flush Mount
Bronze Finish
Acrylic Lens
9.5''L x 9.5''W x 0.5''H
1 x 15 W SSL Dedicated LED (Included)
1044 Delivered Lumens
3000K, 90 CRI, 120v
Dimmable
Damp Location
ETL (US/Canada) Listed
JA8-2016/Title 24 Listed

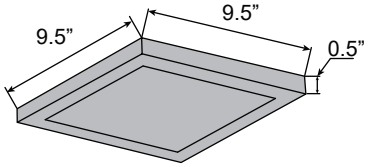

DISC

20810LEDD-BS/ACR
Brushed Steel Finish

20810LEDD-WH/ACR
White Finish

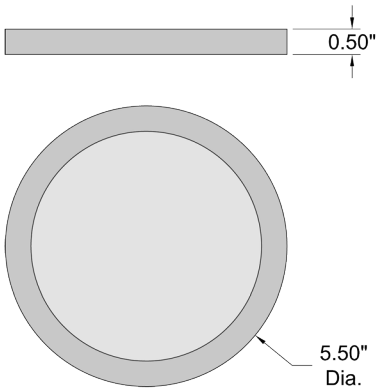

20810LEDD-BRZ/ACR
LED Flush Mount
Bronze Finish
Acrylic Lens
5.5''DIA. x 0.5''H
1 x 12 W SSL Dedicated LED (Included)
741 Delivered Lumens
3000K, 90 CRI, 120v
Dimmable
Damp Location
ETL (US/Canada) Listed
JA8-2016/Title 24 Listed

DISC

20811LEDD-BRZ/ACR
Bronze Finish

20811LEDD-WH/ACR

LED Flush Mount
White Finish
Acrylic Lens
7.5''DIA. x 0.5''H
1 x 15 W SSL Dedicated LED (Included)
1067 Delivered Lumens
3000K, 90 CRI, 120v
Dimmable
Damp Location
ETL (US/Canada) Listed
JA8-2016/Title 24 Listed

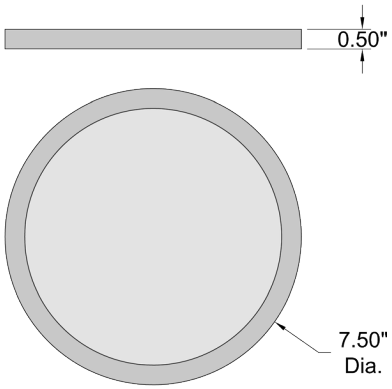

20811LEDD-BS/ACR
Brushed Steel Finish

DISC

20812LEDD-BRZ/ACR
Bronze Finish

20812LEDD-BS/ACR

LED Flush Mount
Brushed Steel Finish
Acrylic Lens
9.5''DIA. x 0.5''H
1 x 15 W SSL Dedicated LED (Included)
1067 Delivered Lumens
3000K, 90 CRI, 120v
Dimmable
Damp Location
ETL (US/Canada) Listed
JA8-2016/Title 24 Listed

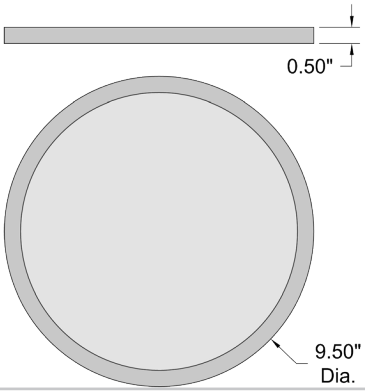

20812LEDD-WH/ACR
White Finish

COBALT

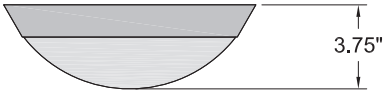

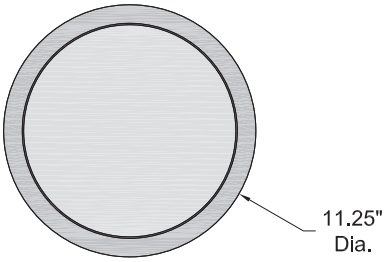

20624-WH/OPL
White Finish

20624-BS/OPL
Flush Mount
Brushed Steel Finish
Opal Glass
11.25''DIA. x 3.75''H
1 x 100 W E-26 Incandescent
120v
Dimmable
Damp Location
UL (US/Canada) Listed

COBALT

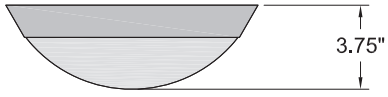

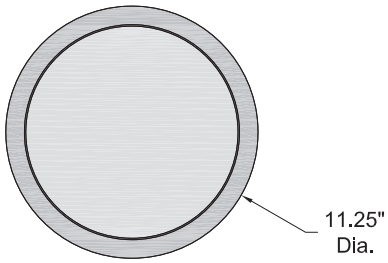

20624LEDDLP-BS/OPL
Brushed Steel Finish

20624LEDDLP-WH/OPL
LED Flush Mount
White Finish
Opal Glass
11.25''DIA. x 3.75''H
1 x 10 W E-26 Replaceable LED (Included)
800 Nominal Lumens
3000K, 90 CRI, 120v
Dimmable
Damp Location
UL (US/Canada) Listed
JA8-2016/Title 24 Listed, Title 20

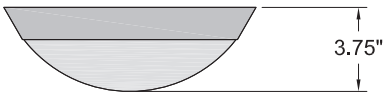

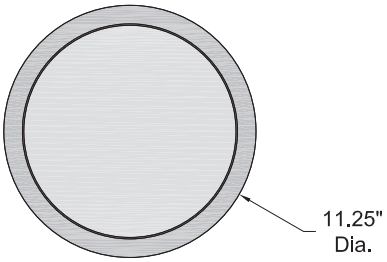

20624LEDD-WH/OPL

LED Flush Mount

White Finish
Opal Glass
11.25''DIA. x 3.75''H
1 x 17 W SSL Dedicated LED (Included)
646 Delivered Lumens
3000K, 90 CRI, 120v
Dimmable
Damp Location
UL (US/Canada) Listed
Energy Star

20624LEDD-BS/OPL
Brushed Steel Finish

COBALT

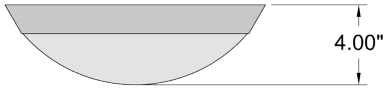

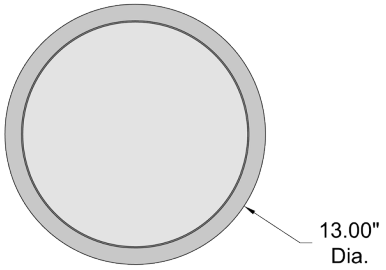

20625-WH/OPL
White Finish

20625-BS/OPL
Flush Mount
Brushed Steel Finish
Opal Glass
13''DIA. x 4''H
2 x 60 W E-26 Incandescent
120v
Dimmable
Damp Location
UL (US/Canada) Listed

COBALT

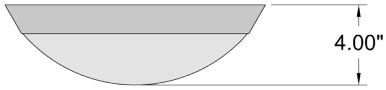

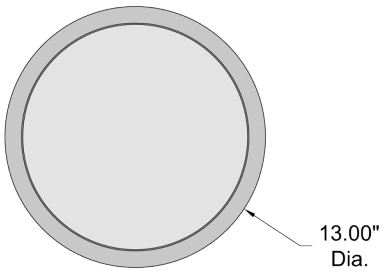

20625LEDDLP-BS/OPL
Brushed Steel Finish

20625LEDDLP-WH/OPL
LED Flush Mount
White Finish
Opal Glass
13''DIA. x 4''H
2 x 10 W E-26 Replaceable LED (Included)
1600 Nominal Lumens
3000K, 90 CRI, 120v
Dimmable
Damp Location
UL (US/Canada) Listed
Energy Star, JA8-2016/Title 24 Listed, Title 20

20625LEDD-WH/OPL

LED Flush Mount

White Finish
Opal Glass
13''DIA. x 4''H
1 x 17 W SSL Dedicated LED (Included)
592 Delivered Lumens
3000K, 90 CRI, 120v
Dimmable
Damp Location
UL (US/Canada) Listed
Energy Star

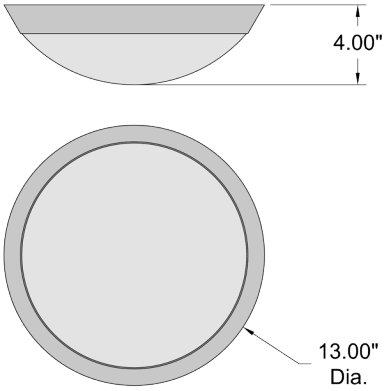

20625LEDD-BS/OPL
Brushed Steel Finish

20626-BS/OPL

Flush Mount

Brushed Steel Finish
Opal Glass
15''DIA. x 5''H
2 x 75 W E-26 Incandescent
120v
Dimmable
Damp Location
UL (US/Canada) Listed

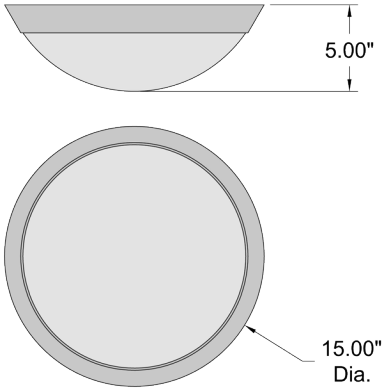

20626-WH/OPL
White Finish

COBALT

20626LEDDLP-WH/OPL
White Finish

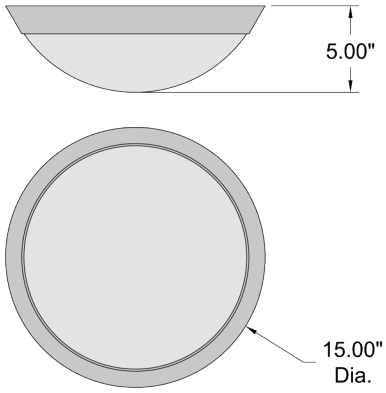

20626LEDDLP-BS/OPL
LED Flush Mount
Brushed Steel Finish
Opal Glass
15''DIA. x 5''H
2 x 10 W E-26 Replaceable LED (Included)
1600 Nominal Lumens
3000K, 90 CRI, 120v
Dimmable
Damp Location
UL (US/Canada) Listed
Energy Star, JA8-2016/Title 24 Listed, Title 20

COBALT

20626LEDD-BS/OPL
Brushed Steel Finish

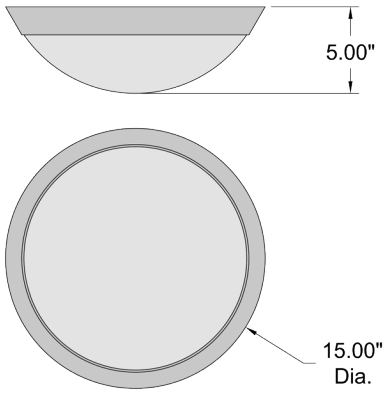

20626LEDD-WH/OPL
LED Flush Mount
White Finish
Opal Glass
15''DIA. x 5''H
1 x 30 W SSL Dedicated LED (Included)
1325 Delivered Lumens
3000K, 90 CRI, 120v
Dimmable
Damp Location
UL (US/Canada) Listed
Energy Star, JA8-2016/Title 24 Listed

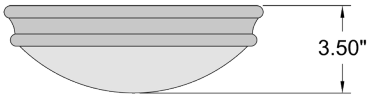

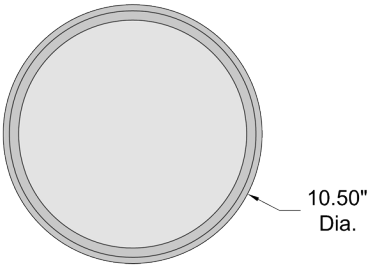

20724-ORB/OPL

Flush Mount

Oil Rubbed Bronze Finish
Opal Glass
10.5''DIA. x 3.5''H
1 x 100 W E-26 Incandescent
120v
Dimmable
Damp Location
UL (US/Canada) Listed

20724-BS/OPL
Brushed Steel Finish

ATOM

20724LEDDLP-ORB/OPL
Oil Rubbed Bronze Finish

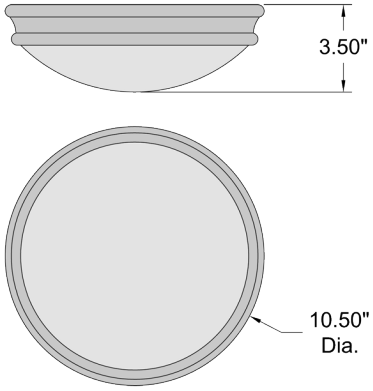

20724LEDDLP-BS/OPL
LED Flush Mount
Brushed Steel Finish
Opal Glass
10.5''DIA. x 3.5''H
1 x 10 W E-26 Replaceable LED (Included)
800 Nominal Lumens
3000K, 90 CRI, 120v
Dimmable
Damp Location
UL (US/Canada) Listed
JA8-2016/Title 24 Listed, Title 20

ATOM

20724LEDD-BS/OPL
Brushed Steel Finish

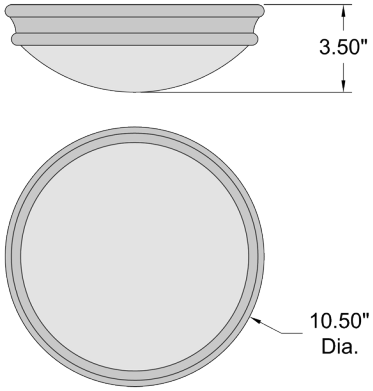

20724LEDD-ORB/OPL
LED Flush Mount
Oil Rubbed Bronze Finish
Opal Glass
10.5''DIA. x 3.5''H
1 x 17 W SSL Dedicated LED (Included)
646 Delivered Lumens
3000K, 90 CRI, 120v
Dimmable
Damp Location
UL (US/Canada) Listed
Energy Star

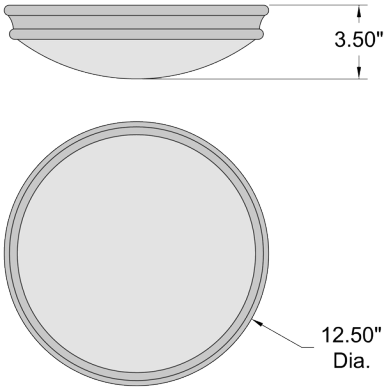

20725-ORB/OPL

Flush Mount

Oil Rubbed Bronze Finish
Opal Glass
12.5''DIA. x 3.5''H
2 x 60 W E-26 Incandescent
120v
Dimmable
Damp Location
UL (US/Canada) Listed

20725-BS/OPL
Brushed Steel Finish

ATOM

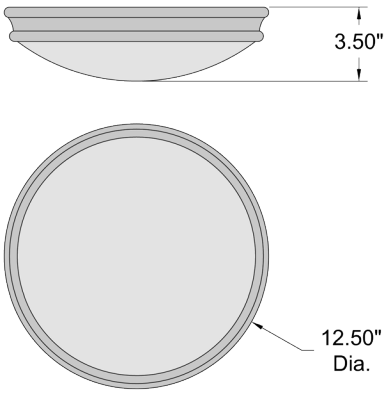

20725LEDDLP-BS/OPL

LED Flush Mount

Brushed Steel Finish
Opal Glass
12.5''DIA. x 3.5''H
2 x 10 W E-26 Replaceable LED (Included)
1600 Nominal Lumens
3000K, 90 CRI, 120v
Dimmable
Damp Location
UL (US/Canada) Listed
JA8-2016/Title 24 Listed, Title 20

20725LEDDLP-ORB/OPL
Oil Rubbed Bronze Finish

ATOM

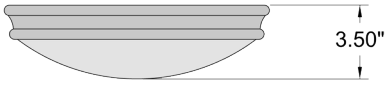

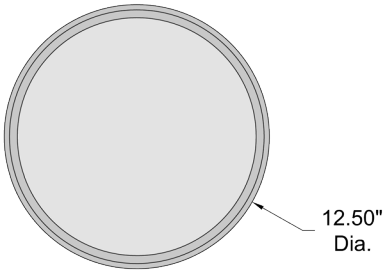

20725LEDD-BS/OPL
Brushed Steel Finish

20725LEDD-ORB/OPL
LED Flush Mount
Oil Rubbed Bronze Finish
Opal Glass
12.5''DIA. x 3.5''H
1 x 17 W SSL Dedicated LED (Included)
592 Delivered Lumens
3000K, 90 CRI, 120v
Dimmable
Damp Location
UL (US/Canada) Listed
Energy Star

ATOM

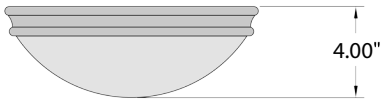

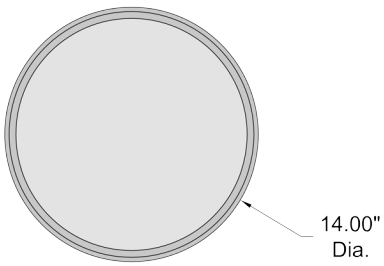

20726-ORB/OPL
Oil Rubbed Bronze Finish

20726-BS/OPL
Flush Mount
Brushed Steel Finish
Opal Glass
14''DIA. x 4''H
3 x 60 W E-26 Incandescent
120v
Dimmable
Damp Location
UL (US/Canada) Listed

20726LEDDLP-BS/OPL

LED Flush Mount
Brushed Steel Finish
Opal Glass
14''DIA. x 4''H
3 x 10 W E-26 Replaceable LED (Included)
2400 Nominal Lumens
3000K, 90 CRI, 120v
Dimmable
Damp Location
UL (US/Canada) Listed
Energy Star, JA8-2016/Title 24 Listed, Title 20

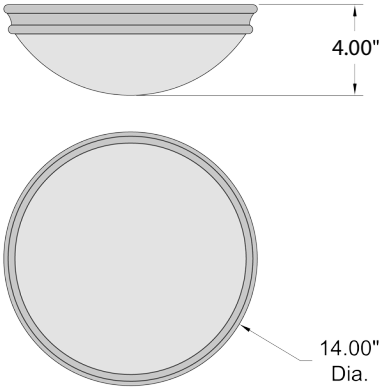

20726LEDDLP-ORB/OPL
Oil Rubbed Bronze Finish

ATOM

20726LEDD-ORB/OPL

LED Flush Mount
Oil Rubbed Bronze Finish
Opal Glass
14''DIA. x 4''H
1 x 30 W SSL Dedicated LED (Included)
1300 Delivered Lumens
3000K, 90 CRI, 120v
Dimmable
Damp Location
UL (US/Canada) Listed
Energy Star, JA8-2016/Title 24 Listed

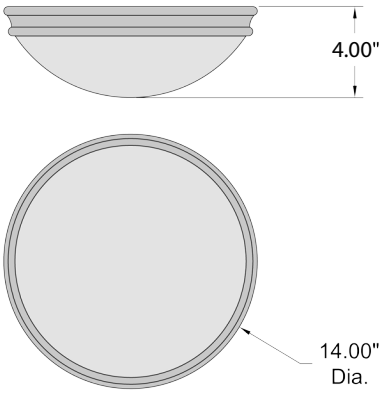

20726LEDD-BS/OPL
Brushed Steel Finish

ZENON

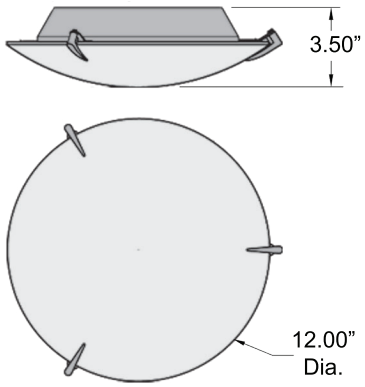

20661-BS/OPL

Flush Mount

Brushed Steel Finish
Opal Glass
12’’DIA. x 3.5’’H
2 x 60 W E-26 Incandescent
120v
Dimmable
Damp Location
UL (US/Canada) Listed

ZENON

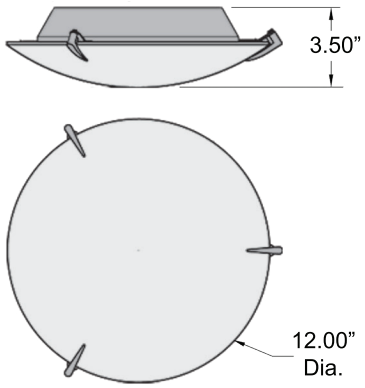

20661LEDDLP-BS/OPL

LED Flush Mount

Brushed Steel Finish
Opal Glass
12’’DIA. x 3.5’’H
2 x 10 W E-26 Replaceable LED (Included)
1600 Nominal Lumens
3000K, 90 CRI, 120v
Dimmable
Damp Location
UL (US/Canada) Listed
JA8-2016/Title 24 Listed, Title 20

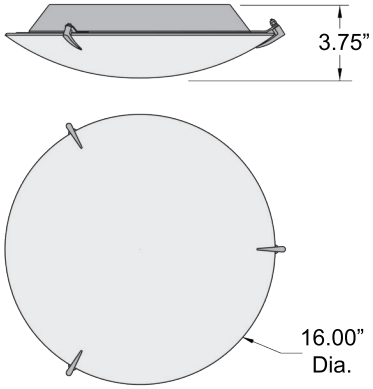

20662-BS/OPL

Flush Mount

Brushed Steel Finish
Opal Glass
16’’DIA. x 3.75’’H
3 x 60 W E-26 Incandescent
120v
Dimmable
Damp Location
UL (US/Canada) Listed

ZENON

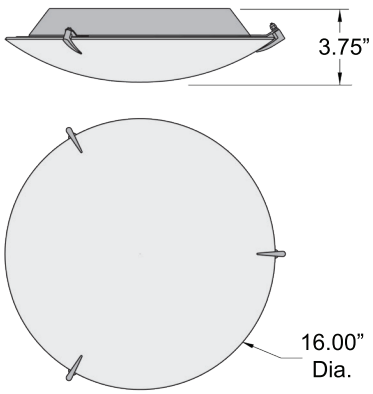

20662LEDDLP-BS/OPL

LED Flush Mount

Brushed Steel Finish
Opal Glass
16’’DIA. x 3.75’’H
3 x 10 W E-26 Replaceable LED (Included)
2400 Nominal Lumens
3000K, 90 CRI, 120v
Dimmable
Damp Location
UL (US/Canada) Listed
JA8-2016/Title 24 Listed, Title 20

LUCID
MOTION SENSOR

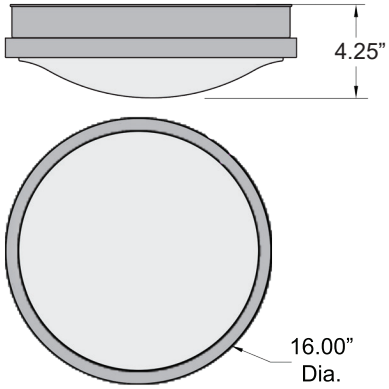

20799LEDMS-BS/ACR

Motion Sensor LED Flush Mount

Brushed Steel Finish
Acrylic Lens
16’’DIA. x 4.25’’H
1 x 23 W SSL Dedicated LED (Included)
1600 Delivered Lumens
3000K, 80 CRI, 120v
Damp Location
Daylight Sensor
On Time Adjustment: 15 sec, 30 sec, 1 min, 5 min
Detection Range Adjustment: 25’, 20’, 10’, 2’

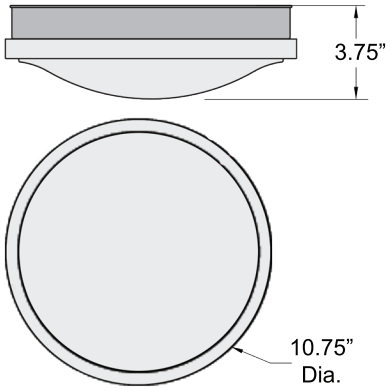

50160-WH/OPL

Flush Mount

White Finish
Opal Glass
10.75’’DIA. x 3.75’’H
2 x 60 W E-26 Incandescent
120v
Dimmable
Damp Location
ETL (US/Canada) Listed

ORION

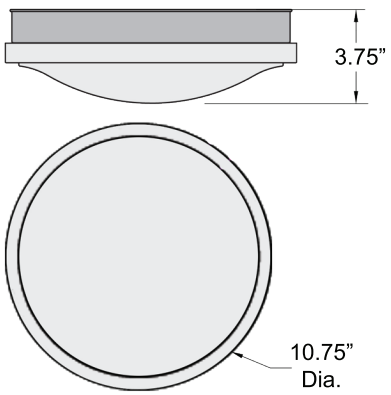

50160LEDDLP-WH/OPL

LED Flush Mount

White Finish
Opal Glass
10.75’’DIA. x 3.75’’H
2 x 10 W E-26 Replaceable LED (Included)
1600 Nominal Lumens
3000K, 90 CRI, 120v
Dimmable
Damp Location
ETL (US/Canada) Listed
JA8-2016/Title 24 Listed, Title 20

CATCH

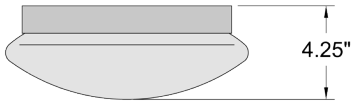

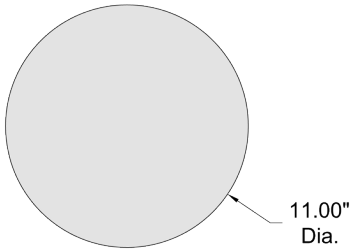

20780LEDD-WH/ACR

LED Flush Mount

White Finish
Acrylic Lens
11''DIA. x 4.25''H
1 x 15 W SSL Dedicated LED (Included)
1089 Delivered Lumens
3000K, 80 CRI, 120v
Dimmable
Damp Location
ETL (US/Canada) Listed

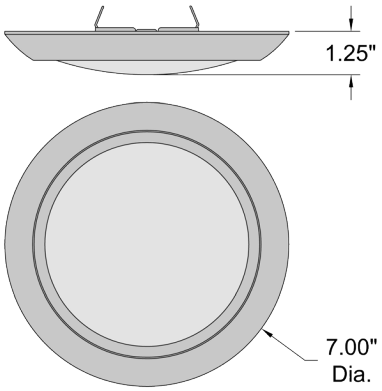

20875LEDD-WH/ACR

LED Flush Mount

White Finish
Acrylic Lens
7''DIA. x 1.25''H
1 x 15 W SSL Dedicated LED (Included)
1074 Delivered Lumens
3000K, 90 CRI, 120v
Dimmable
Indoor Wet Location
ETL (US/Canada) Listed
JA8-2016/Title 24 Listed
5'' and 6'' Recessed Can Adapter Available

MID TOWN

SEMI FLUSH

DUO

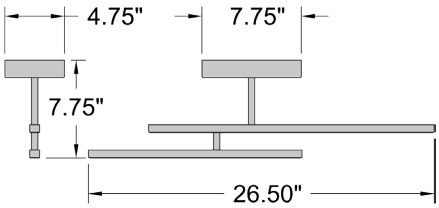

63077LEDD-MBL/ACR
Adjustable LED Semi-Flush
Matte Black Finish
Acrylic Lens
26.5''L x 4.75''W x 7.75''H
1 x 15 W SSL Dedicated LED (Included)
1260 Delivered Lumens
3000K, 90 CRI, 120v
Dimmable
Damp Location
ETL (US/Canada) Listed
JA8-2016/Title 24 Listed

63077LEDD-MWH/ACR
Matte White Finish

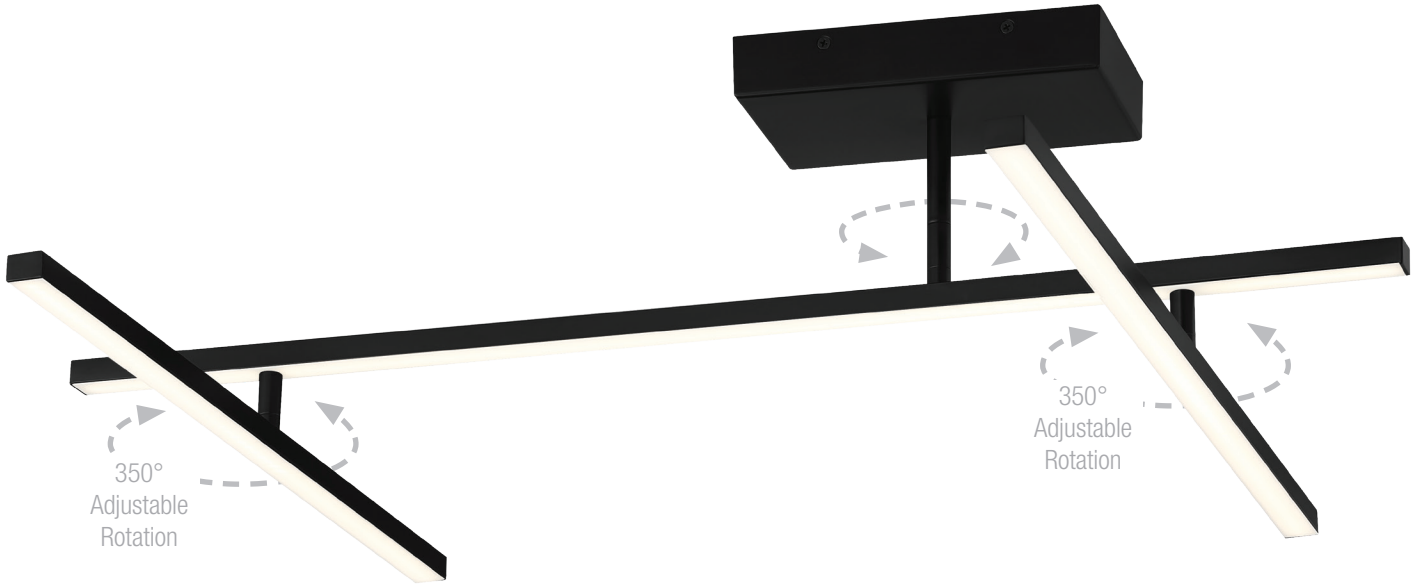

63078LEDD-MBL/ACR

Adjustable LED Semi-Flush

Matte Black Finish
Acrylic Lens
45''L x 4.75''W x 7.75''H
1 x 29 W SSL Dedicated LED (Included)
2261 Delivered Lumens
3000K, 90 CRI, 120v
Dimmable
Damp Location
ETL (US/Canada) Listed
JA8-2016/Title 24 Listed

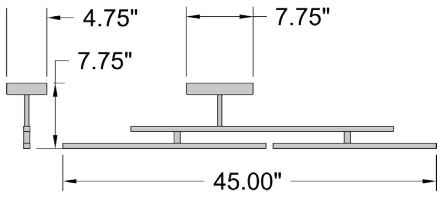

63078LEDD-MWH/ACR
Matte White Finish

PORT NINE

63146LEDD-ABB/CLR
Antique Brushed Brass Finish

63146LEDD-MBL/CLR
Matte Black Finish

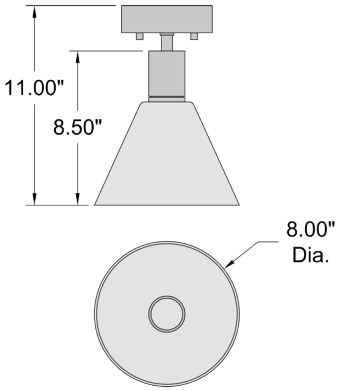

63146LEDD-BS/CLR
Martini LED Semi-Flush
Brushed Steel Finish
Clear Glass
8''DIA. x 11''H
1 x 9 W SSL Dedicated LED (Included)
506 Delivered Lumens
3000K, 90 CRI, 120v
Dimmable
Damp Location
ETL (US/Canada) Listed
JA8-2016/Title 24 Listed

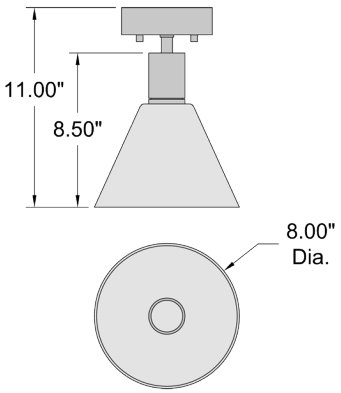

63146LEDD-ABB/SDG

Martini LED Semi-Flush

Antique Brushed Brass Finish
Seeded Glass
8''DIA. x 11''H
1 x 9 W SSL Dedicated LED (Included)
506 Delivered Lumens
3000K, 90 CRI, 120v
Dimmable
Damp Location
ETL (US/Canada) Listed
JA8-2016/Title 24 Listed

63146LEDD-BS/SDG
Brushed Steel Finish

63146LEDD-MBL/SDG
Matte Black Finish

63147LEDD-BS/CLR
Brushed Steel Finish

63147LEDD-MBL/CLR
Matte Black Finish

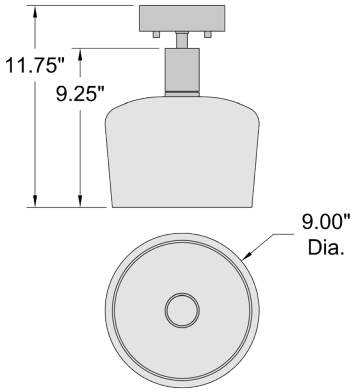

63147LEDD-ABB/CLR
Chardonnay LED Semi-Flush
Antique Brushed Brass Finish
Clear Glass
9''DIA. x 11.75''H
1 x 9 W SSL Dedicated LED (Included)
506 Delivered Lumens
3000K, 90 CRI, 120v
Dimmable
Damp Location
ETL (US/Canada) Listed
JA8-2016/Title 24 Listed

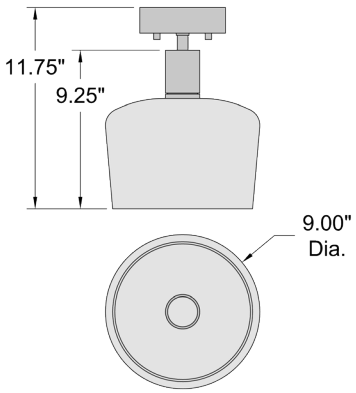

63147LEDD-MBL/SDG

Chardonnay LED Semi-Flush

Matte Black Finish
Seeded Glass
9''DIA. x 11.75''H
1 x 9 W SSL Dedicated LED (Included)
506 Delivered Lumens
3000K, 90 CRI, 120v
Dimmable
Damp Location
ETL (US/Canada) Listed
JA8-2016/Title 24 Listed

63147LEDD-ABB/SDG
Antique Brushed Brass Finish

63147LEDD-BS/SDG
Brushed Steel Finish

63148LEDD-ABB/CLR
Antique Brushed Brass Finish

63148LEDD-BS/CLR
Brushed Steel Finish

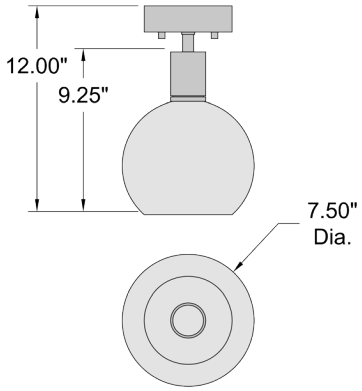

63148LEDD-MBL/CLR
Burgundy LED Semi-Flush
Matte Black Finish
Clear Glass
7.5''DIA. x 12''H
1 x 9 W SSL Dedicated LED (Included)
506 Delivered Lumens
3000K, 90 CRI, 120v
Dimmable
Damp Location
ETL (US/Canada) Listed
JA8-2016/Title 24 Listed

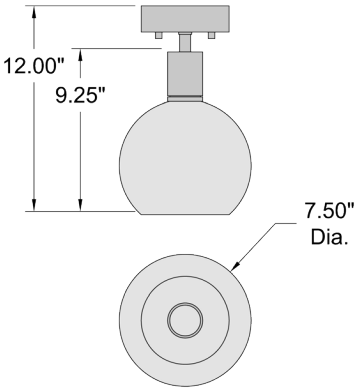

63148LEDD-BS/SDG

Burgundy LED Semi-Flush

Brushed Steel Finish
Seeded Glass
7.5''DIA. x 12''H
1 x 9 W SSL Dedicated LED (Included)
506 Delivered Lumens
3000K, 90 CRI, 120v
Dimmable
Damp Location
ETL (US/Canada) Listed
JA8-2016/Title 24 Listed

63148LEDD-ABB/SDG
Antique Brushed Brass Finish

63148LEDD-MBL/SDG
Matte Black Finish

SPHERE

20494LEDD-BS/ACR
Brushed Steel Finish

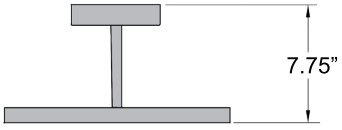

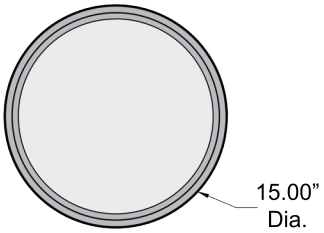

20494LEDD-ORB/ACR
LED Semi-Flush
Oil Rubbed Bronze Finish
Acrylic Lens
15’’DIA. x 7.75’’H
1 x 28 W SSL Dedicated LED (Included)
951 Delivered Lumens
3000K, 90 CRI, 120v
Dimmable
Damp Location
ETL (US/Canada) Listed
JA8-2016/Title 24 Listed

WIRED

23892LEDDLP-GLD
Gold Finish

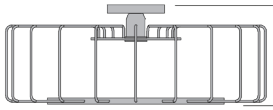

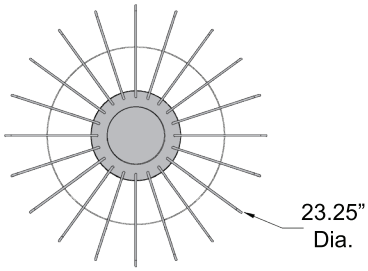

23892LEDDLP-BL
LED Semi-Flush
Black Finish
23.25’’DIA. x 9’’H
1 x 7 W E-26 Replaceable LED (Included)
800 Delivered Lumens
2700K, 82 CRI, 120v
Dimmable
Damp Location
UL (US/Canada) Listed
Title 20

BOULDER

63125LEDDLP-MSS/CLR

LED Semi-Flush

Mirrored Stainless Steel Finish
Clear Glass
10''L x 10''W x 13.25''H
1 x 5 W E-26 Replaceable LED (Included)
380 Nominal Lumens
2200K, 80 CRI, 120v
Dimmable
Damp Location
UL (US/Canada) Listed
Title 20

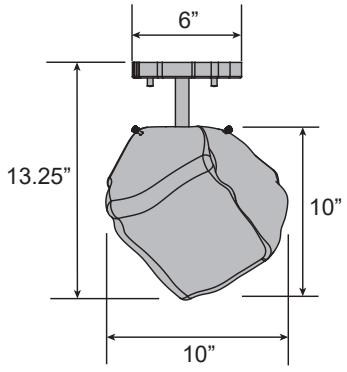

MID TOWN

64065LEDDLP-BS/WH
Brushed Steel Finish

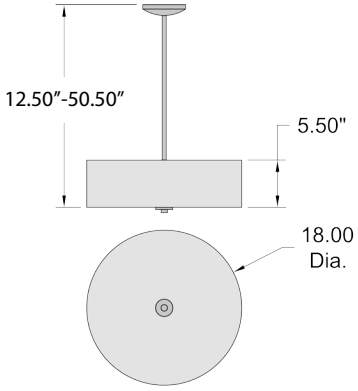

64065LEDDLP-ABB/WH
LED Semi-Flush or Pendant
Antique Brushed Brass Finish
Fabric
18''DIA. x 5.5''H x 50.5''OAH
3 x 10 W E-26 Replaceable LED (Included)
2573 Delivered Lumens
3000K, 90 CRI, 120v
Dimmable
Dry Location
UL (US/Canada) Listed
JA8-2016/Title 24 Listed, Title 20
6, 16, and 22-inch Down Rods Included

MID TOWN

64066LEDDLP-ABB/WH
Antique Brushed Brass Finish

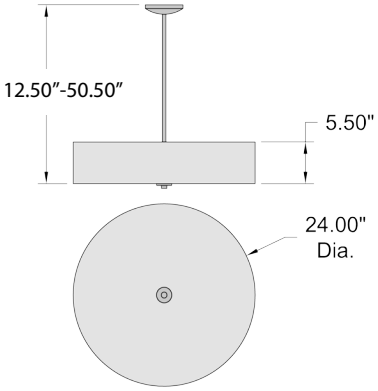

64066LEDDLP-BS/WH
LED Semi-Flush or Pendant
Brushed Steel Finish
Fabric
24''DIA. x 5.5''H x 50.5''OAH
4 x 10 W E-26 Replaceable LED (Included)
3548 Delivered Lumens
3000K, 90 CRI, 120v
Dimmable
Dry Location
UL (US/Canada) Listed
JA8-2016/Title 24 Listed, Title 20
6, 16, and 22-inch Down Rods Included

SOLERO

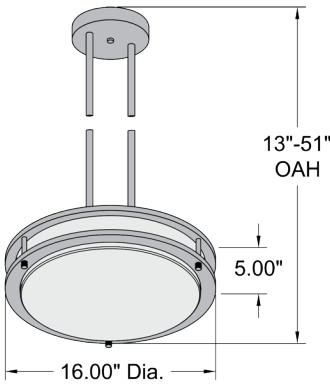

20469LEDD-BS/ACR

LED Semi-Flush or Pendant

Brushed Steel Finish
Acrylic Lens
16''DIA. x 5''H x 13''-51''OAH
1 x 25 W SSL Dedicated LED (Included)
1765 Delivered Lumens
3000K, 90 CRI, 120v
Dimmable
Damp Location
ETL (US/Canada) Listed
6, 16, and 22-inch Down Rods Included

20469LEDD-BRZ/ACR
Bronze Finish

I-BIZA

PENDANT

FLOAT

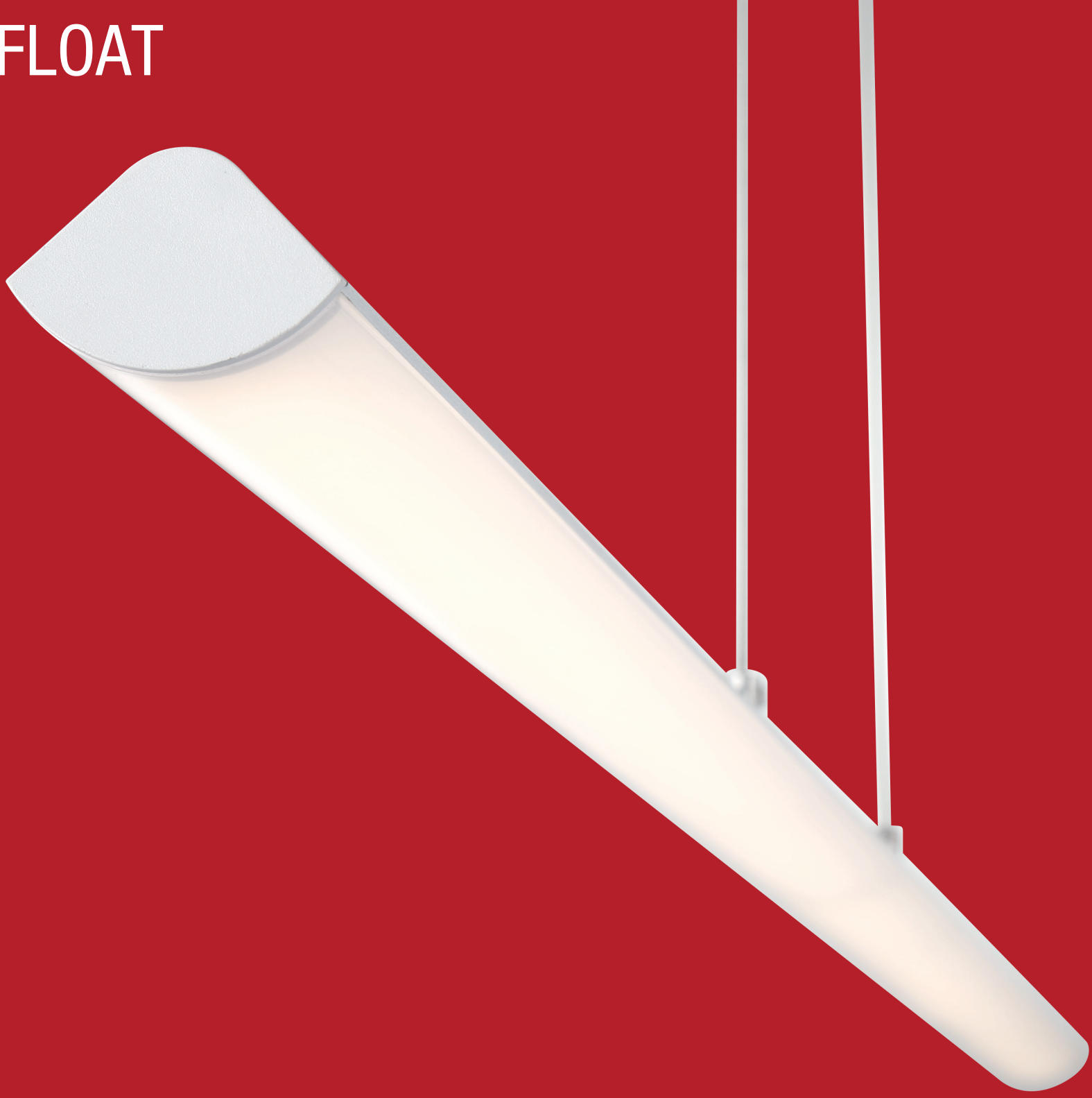

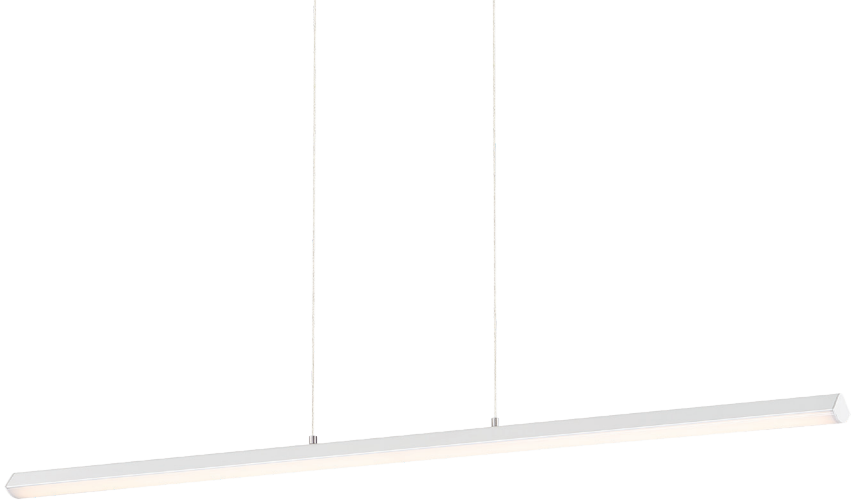

63963LEDD-MWH/ACR

LED Linear Pendant

Matte White Finish
Acrylic Lens
1.75''L x 36''W x 2.75''H x 5''-120''OAH
1 x 22 W SSL Dedicated LED (Included)
1466 Delivered Lumens
3200K, 90 CRI, 120v
Dimmable
Damp Location
UL (US/Canada) Listed
JA8-2016/Title 24 Listed
10 Feet of Aircraft Cable Included

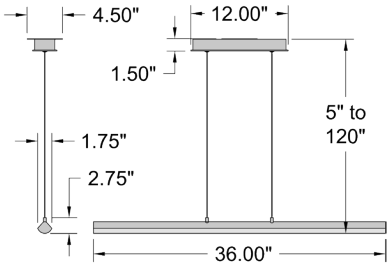

63963LEDD-MBL/ACR
Matte Black Finish

63963LEDD-SILV/ACR
Silver Finish

63964LEDD-MBL/ACR

LED Linear Pendant

Matte Black Finish
Acrylic Lens
1.75''L x 48''W x 2.75''H x 5''-120''OAH
1 x 30 W SSL Dedicated LED (Included)
1869 Delivered Lumens
3200K, 90 CRI, 120v
Dimmable
Damp Location
UL (US/Canada) Listed
JA8-2016/Title 24 Listed
10 Feet of Aircraft Cable Included

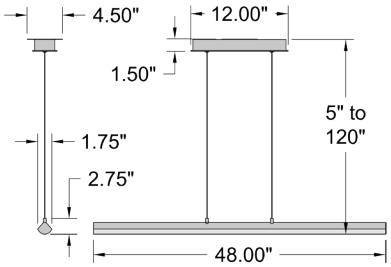

63964LEDD-MWH/ACR
Matte White Finish

63964LEDD-SILV/ACR
Silver Finish

HOLM

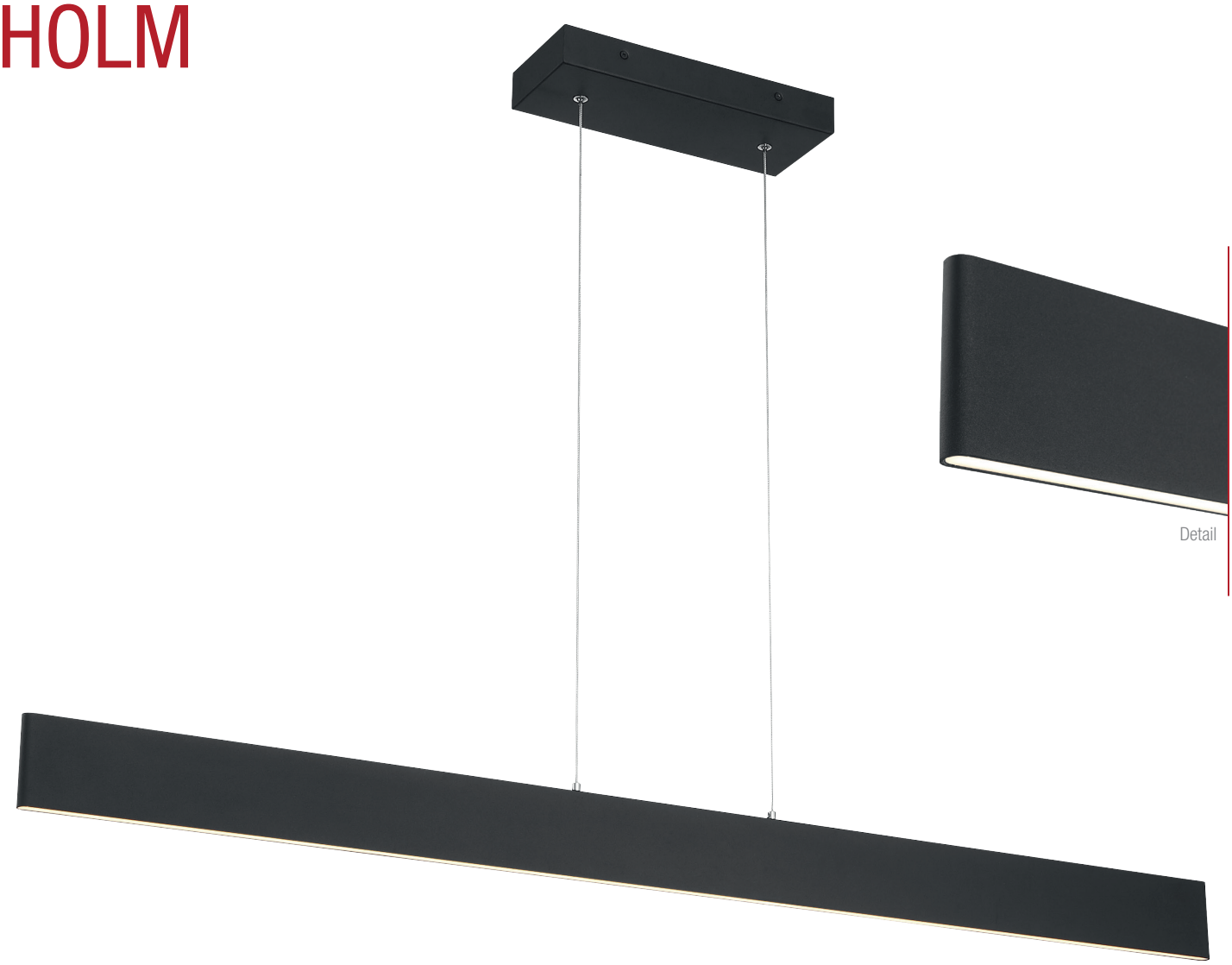

Detail

24896LEDD-MWH/ACR
Matte White Finish

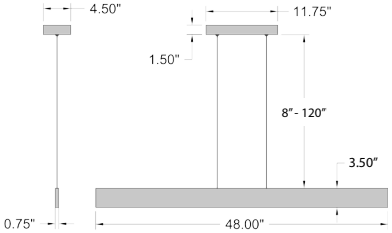

24896LEDD-MBL/ACR
LED Linear Pendant
Matte Black Finish
Acrylic Lens
48''L x 3.5''H x 8''-120''OAH
1 x 24 W SSL Dedicated LED (Included)
1955 Delivered Lumens
3000K, 90 CRI, 120v
Dimmable
Dry Location
UL (US/Canada) Listed
10 Feet of Aircraft Cable Included

CARMEL

Detail

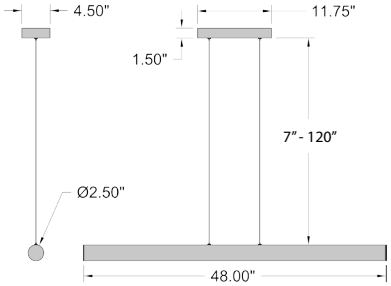

24891LEDD-MWH/ACR

LED Linear Pendant

Matte White Finish
Acrylic Lens
48''L x 2.5''DIA. x 7''-120''OAH
1 x 24 W SSL Dedicated LED (Included)
1955 Delivered Lumens
3000K, 90 CRI, 120v
Dimmable
Dry Location
UL (US/Canada) Listed
10 Feet of Aircraft Cable Included

24891LEDD-MBL/ACR
Matte Black Finish

SQUARED

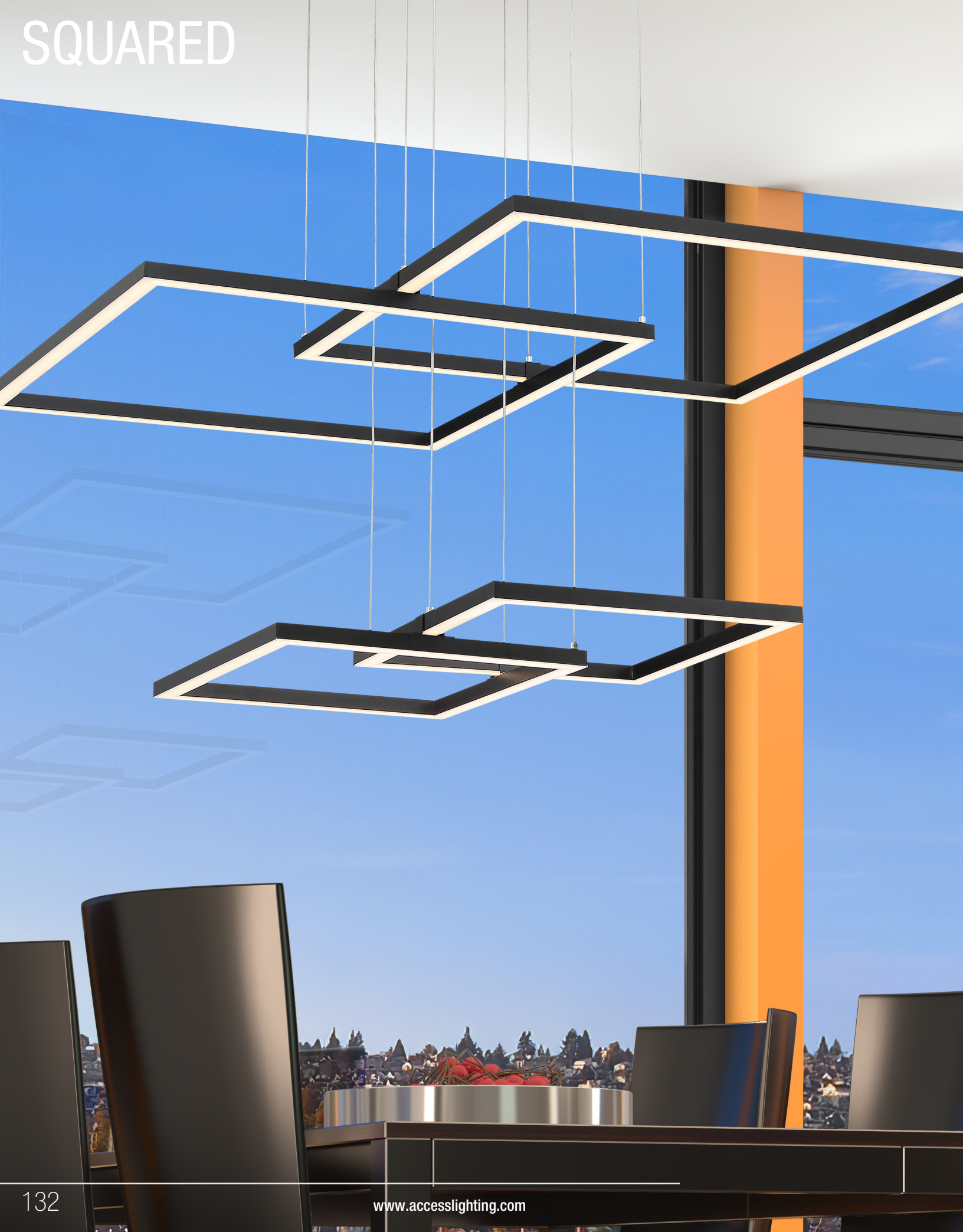

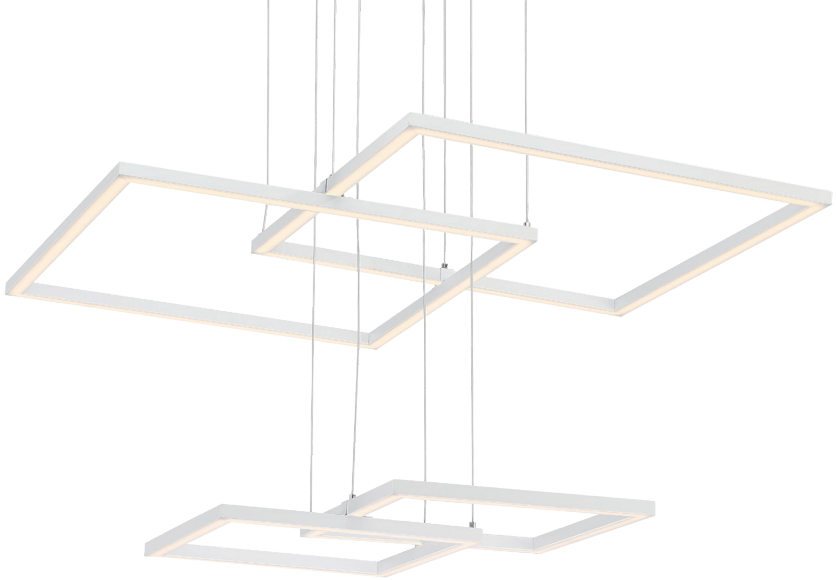

63968LEDD-WH/ACR

LED Pendant

White Finish
Acrylic Lens
30.5''L x 30.5''W x 6''-123''OAH
1 x 75 W SSL Dedicated LED (Included)
5600 Nominal Lumens
3000K, 85 CRI, 120v
Dimmable
Damp Location
UL (US/Canada) Listed
10 Feet of Aircraft Cable Included

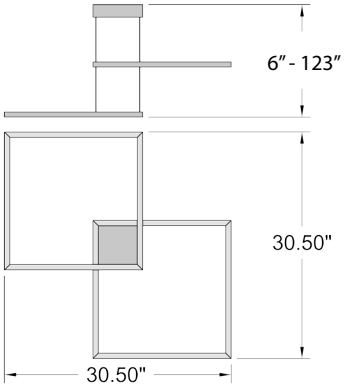

63968LEDD-BL/ACR
Black Finish

AVIATOR

63965LEDD-CH/ACR

LED Pendant or Semi-Flush

Chrome Finish
Acrylic Lens
34''DIA. x 2.5''H x 4''-50''OAH
3 x 8 W SSL Dedicated LED (Included)
1287 Delivered Lumens
3200K, 85 CRI, 120v
Dimmable
Dry Location
UL (US/Canada) Listed
Included; Sloped Ceiling Adapter
10 Feet of Cable, 6, 16, and 22-inch Down Rods
Optional 6, 16, and 22-inch Down Rods Available

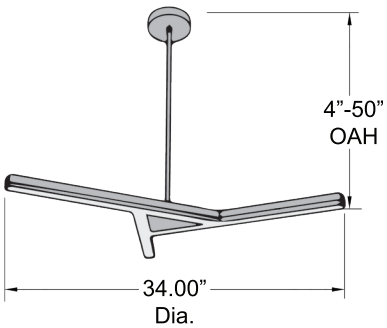

RADIANT

50942LEDD-WH/ACR
White Finish

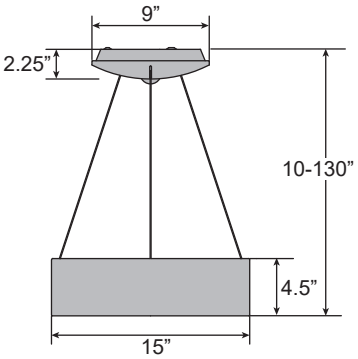

50942LEDD-GRY/ACR
Dual Voltage LED Pendant
Gray Finish
Acrylic Lens
15’’DIA. x 8’’H x 10’’-130’’OAH
1 x 21 W SSL Dedicated LED (Included)
708 Delivered Lumens
3000K, 85 CRI, 120-277v
Dimmable
Damp Location
UL (US/Canada) Listed
10 Feet of Aircraft Cable Included

RADIANT

50940LEDD-GRY/ACR
Gray Finish

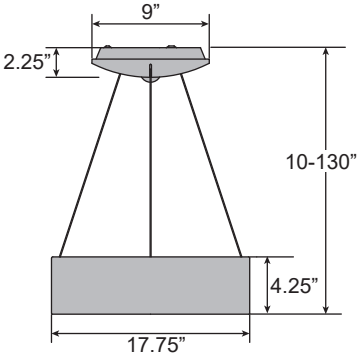

50940LEDD-WH/ACR
Dual Voltage LED Pendant
White Finish
Acrylic Lens
17.75’’DIA. x 4.25’’H x 10’’-130’’OAH
1 x 30 W SSL Dedicated LED (Included)
1585 Delivered Lumens
3000K, 80 CRI, 120-277v
Dimmable
Dry Location
UL (US/Canada) Listed
10 Feet of Aircraft Cable Included

ARCHITECTURE
STING SUITE

MID TOWN

64065LEDDLP-BS/WH
Brushed Steel Finish

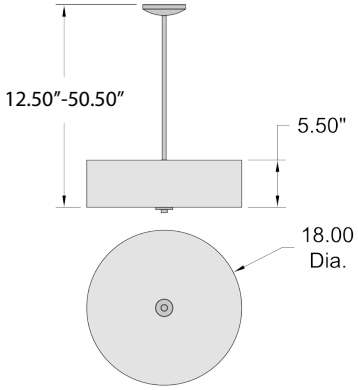

64065LEDDLP-ABB/WH
LED Pendant or Semi-Flush
Antique Brushed Brass Finish
Fabric Shade with Frosted Glass Diffuser
18''DIA. x 5.5''H x 12.5''-50.5''OAH
3 x 10 W E-26 Replaceable LED (Included)
2573 Delivered Lumens
3000K, 90 CRI, 120v
Dimmable
Dry Location
UL (US/Canada) Listed
JA8-2016/Title 24 Listed, Title 20
Included; Sloped Ceiling Adapter
10 Feet of Cable, 6, 16, and 22-inch Down Rods
Optional 6, 16, and 22-inch Down Rods Available

MID TOWN

64066LEDDLP-ABB/WH
Antique Brushed Brass Finish

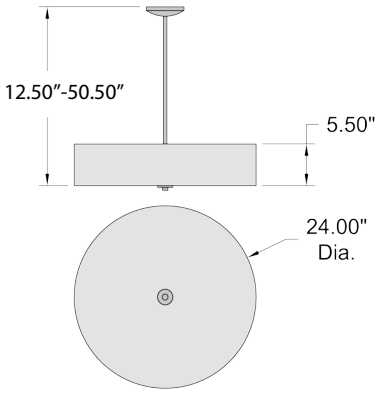

64066LEDDLP-BS/WH
LED Pendant or Semi-Flush
Brushed Steel Finish
Fabric Shade with Frosted Glass Diffuser
24''DIA. x 5.5''H x 12.5''-50.5''OAH
4 x 10 W E-26 Replaceable LED (Included)
3548 Delivered Lumens
3000K, 90 CRI, 120v
Dimmable
Dry Location
UL (US/Canada) Listed
JA8-2016/Title 24 Listed, Title 20
Included; Sloped Ceiling Adapter
10 Feet of Cable, 6, 16, and 22-inch Down Rods
Optional 6, 16, and 22-inch Down Rods Available

AERO

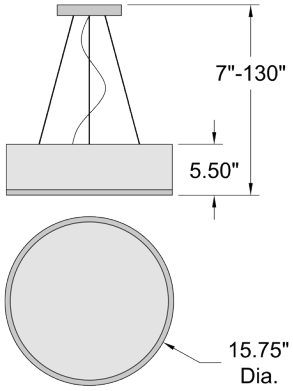

20673-CH/OPL

Pendant

Chrome Finish
Opal Glass
15.75''DIA. x 5.5''H x 7''-130''OAH
3 x 60 W E-26 Incandescent
120v
Dimmable
Damp Location
UL (US/Canada) Listed
10 Feet of Cable and Cord Included

AERO

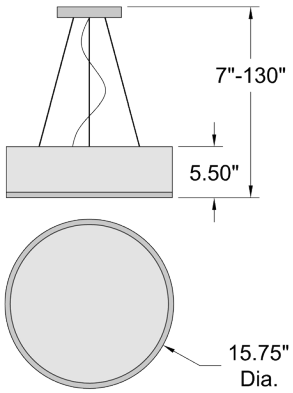

20673LEDDLP-CH/OPL

LED Pendant

Chrome Finish
Opal Glass
15.75''DIA. x 5.5''H x 7''-130''OAH
3 x 10 W E-26 Replaceable LED (Included)
2400 Nominal Lumens
3000K, 90 CRI, 120v
Dimmable
Damp Location
UL (US/Canada) Listed
JA8-2016/Title 24 Listed, Title 20
10 Feet of Cable and Cord Included

20673LEDD-CH/OPL

LED Pendant

Chrome Finish
Opal Glass
15.75''DIA. x 5.5''H x 7''-130''OAH
1 x 30 W SSL Dedicated LED (Included)
1992 Delivered Lumens
3000K, 90 CRI, 120v
Dimmable
Damp Location
UL (US/Canada) Listed
Energy Star
10 Feet of Cable and Cord Included

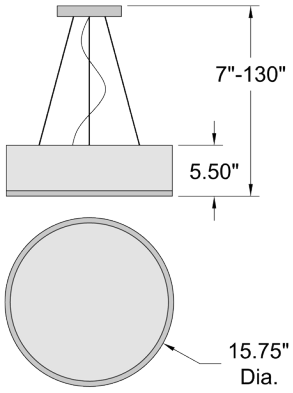

TARA

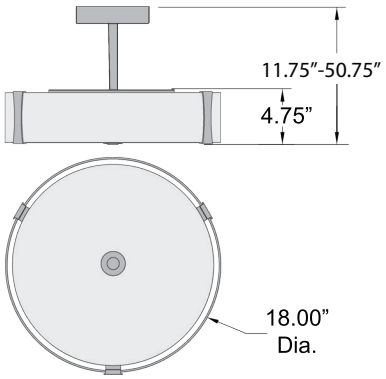

50123-BS/OPL

Semi-Flush or Pendant
Brushed Steel Finish
Opal Glass
18''DIA. x 4.75''H x 11.75''-50.75''OAH
3 x 75 W E-26 Incandescent
120v
Dimmable
Damp Location
UL (US/Canada) Listed
Sloped Ceiling Adapter Included
10 Feet of Cord Included
6, 16, and 22-inch Down Rods Included
Optional 6, 16, and 22-inch Down Rods Available

50123LEDDLP-BS/OPL

LED Semi-Flush or Pendant

Brushed Steel Finish
Opal Glass
18''DIA. x 4.75''H x 11.75''-50.75''OAH
3 x 10 W E-26 Replaceable LED (Included)
2400 Nominal Lumens
3000K, 90 CRI, 120v
Dimmable
Damp Location
UL (US/Canada) Listed
JA8-2016/Title 24 Listed, Title 20
Sloped Ceiling Adapter Included
10 Feet of Cord Included
6, 16, and 22-inch Down Rods Included
Optional 6, 16, and 22-inch Down Rods Available

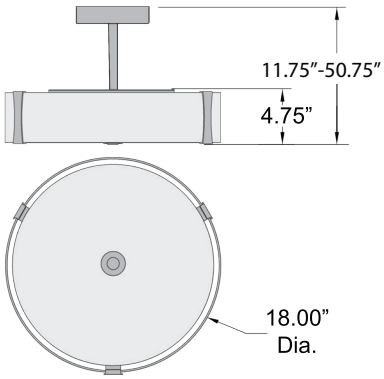

TARA

50123LEDD-BS/OPL

LED Semi-Flush or Pendant

Brushed Steel Finish
Opal Glass
18''DIA. x 4.75''H x 11.75''-50.75''OAH
1 x 30 W SSL Dedicated LED (Included)
1855 Delivered Lumens
3000K, 90 CRI, 120v
Dimmable
Damp Location
UL (US/Canada) Listed
Energy Star
Sloped Ceiling Adapter Included
10 Feet of Cord Included
6, 16, and 22-inch Down Rods Included
Optional 6, 16, and 22-inch Down Rods Available

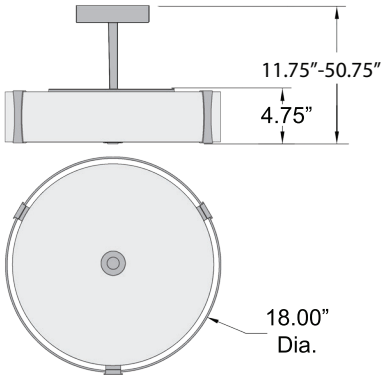

I-BIZA

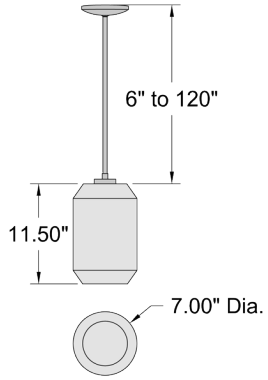

29010LEDDLP-BL/WMB

LED Pendant

Black Finish
White Marble Glass
7''DIA. x 11.5''H x 17.7''-131.50''OAH
1 x 10 W E-26 Replaceable LED (Included)
800 Nominal Lumens
3000K, 90 CRI, 120v
Dimmable
Damp Location
UL (US/Canada) Listed
JA8-2016/Title 24 Listed, Title 20
10 Feet of Black Cord Included

I-BIZA

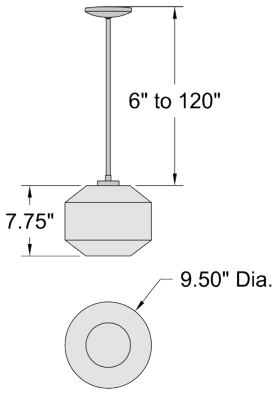

29011LEDDLP-BL/WMB

LED Pendant

Black Finish
White Marble Glass
9.5''DIA. x 7.75''H x 13.75''-127.75''OAH
1 x 10 W E-26 Replaceable LED (Included)
800 Nominal Lumens
3000K, 90 CRI, 120v
Dimmable
Damp Location
UL (US/Canada) Listed
JA8-2016/Title 24 Listed, Title 20
10 Feet of Black Cord Included

CALLISTO

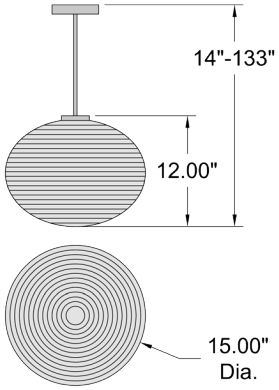

50180-BS/OPL

Pendant

Brushed Steel Finish
Opal Glass
15''DIA. x 12''H x 14''-133''OAH
2 x 60 W E-26 Incandescent
120v
Dimmable
Damp Location
ETL (US/Canada) Listed
10 Feet of Clear Cord Included

CALLISTO

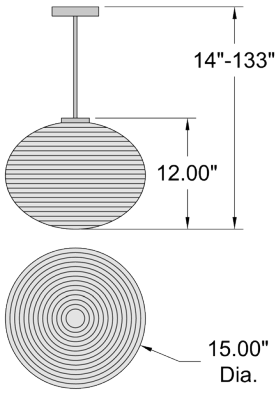

50180LEDDLP-BS/OPL

LED Pendant

Brushed Steel Finish
Opal Glass
15''DIA. x 12''H x 14''-133''OAH
2 x 10 W E-26 Replaceable LED (Included)
1600 Nominal Lumens
3000K, 90 CRI, 120v
Dimmable
Damp Location
ETL (US/Canada) Listed
Energy Star, JA8-2016/Title 24 Listed, Title 20
10 Feet of Clear Cord Included

50181-BS/OPL

Pendant

Brushed Steel Finish
Opal Glass
18''DIA. x 13''H x 15''-134''OAH
3 x 60 W E-26 Incandescent
120v
Dimmable
Damp Location
ETL (US/Canada) Listed
10 Feet of Clear Cord Included

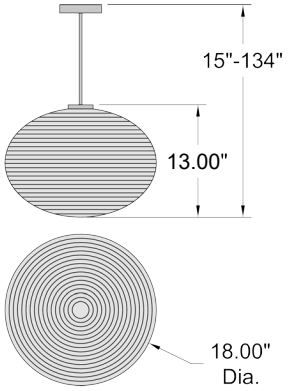

CALLISTO

50181LEDDLP-BS/OPL

LED Pendant

Brushed Steel Finish
Opal Glass
18''DIA. x 13''H x 15''-134''OAH
3 x 10 W E-26 Replaceable LED (Included)
2400 Nominal Lumens
3000K, 90 CRI, 120v
Dimmable
Damp Location
ETL (US/Canada) Listed
Energy Star, JA8-2016/Title 24 Listed, Title 20
10 Feet of Clear Cord Included

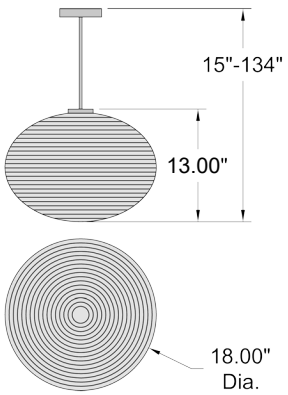

NITROGEN

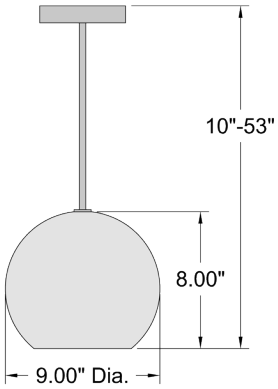

23950-BS/OPL

Pendant

Brushed Steel Finish

Opal Glass

9''DIA. x 8''H x 10''-53''OAH

1 x 60 W E-26 Incandescent

120v

Dimmable

Dry Location

ETL (US/Canada) Listed

Sloped Ceiling Adapter Included

10 Feet of Cord Included

6, 16, and 22-inch Down Rods Included

Optional 6, 16, and 22-inch Down Rods Available

23950LEDDLP-BS/OPL

LED Pendant

Brushed Steel Finish
Opal Glass
9''DIA. x 8''H x 10''-53''OAH
1 x 10 W E-26 Replaceable LED (Included)
800 Nominal Lumens
3000K, 90 CRI, 120v
Dimmable
Dry Location
ETL (US/Canada) Listed
Energy Star, JA8-2016/Title 24 Listed, Title 20
Sloped Ceiling Adapter Included
10 Feet of Cord Included
6, 16, and 22-inch Down Rods Included
Optional 6, 16, and 22-inch Down Rods Available

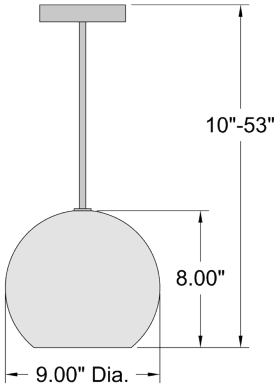

NITROGEN

23951-BS/OPL

Pendant

Brushed Steel Finish
Opal Glass
11.5''DIA. x 10.5''H x 12''-55''OAH
1 x 100 W E-26 Incandescent
120v
Dimmable
Dry Location
ETL (US/Canada) Listed
Sloped Ceiling Adapter Included
10 Feet of Cord Included
6, 16, and 22-inch Down Rods Included
Optional 6, 16, and 22-inch Down Rods Available

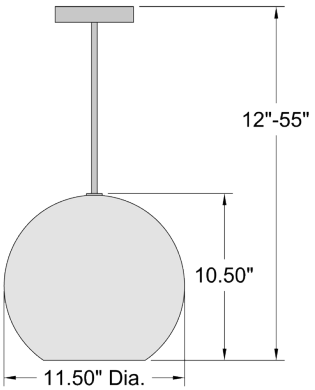

NITROGEN

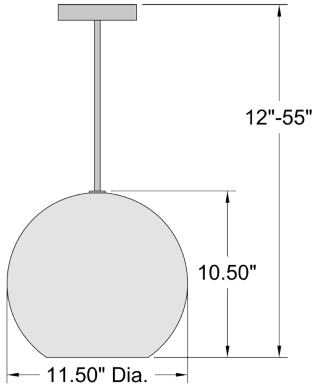

23951LEDDLP-BS/OPL

LED Pendant

Brushed Steel Finish
Opal Glass
11.5''DIA. x 10.5''H x 12''-55''OAH
1 x 10 W E-26 Replaceable LED (Included)
1600 Nominal Lumens
3000K, 90 CRI, 120v
Dimmable
Dry Location
ETL (US/Canada) Listed
Energy Star, JA8-2016/Title 24 Listed, Title 20
Sloped Ceiling Adapter Included
10 Feet of Cord Included
6, 16, and 22-inch Down Rods Included
Optional 6, 16, and 22-inch Down Rods Available

NITROGEN

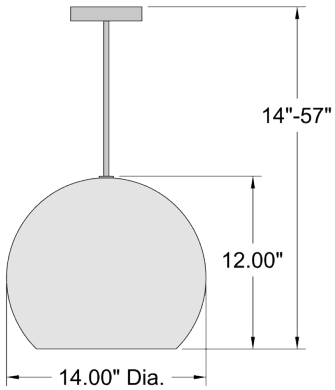

23952-BS/OPL

Pendant

Brushed Steel Finish
Opal Glass
14''DIA. x 12''H x 14''-57''OAH
1 x 100 W E-26 Incandescent
120v
Dimmable
Dry Location
ETL (US/Canada) Listed
Sloped Ceiling Adapter Included
10 Feet of Cord Included
6, 16, and 22-inch Down Rods Included
Optional 6, 16, and 22-inch Down Rods Available

23952LEDDLP-BS/OPL

LED Pendant

Brushed Steel Finish
Opal Glass
14''DIA. x 12''H x 14''-57''OAH
1 x 10 W E-26 Replaceable LED (Included)
1600 Nominal Lumens
3000K, 90 CRI, 120v
Dimmable
Dry Location
ETL (US/Canada) Listed
Energy Star, JA8-2016/Title 24 Listed, Title 20
Sloped Ceiling Adapter Included
10 Feet of Cord Included
6, 16, and 22-inch Down Rods Included
Optional 6, 16, and 22-inch Down Rods Available

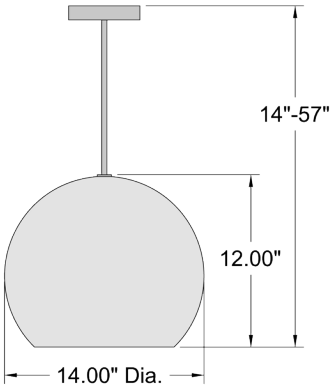

SIMPLICITE

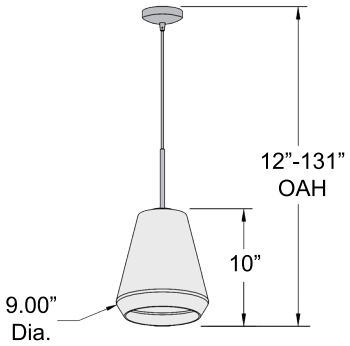

50937-BL/CLR

Pendant
Black Finish
Clear Glass
9’’DIA. x 10’’H x 12’’-131’’OAH
1 x 60 W E-26 Incandescent
120v
Dimmable
Damp Location
UL (US/Canada) Listed
10 Feet of Black Cord Included

SIMPLICITE

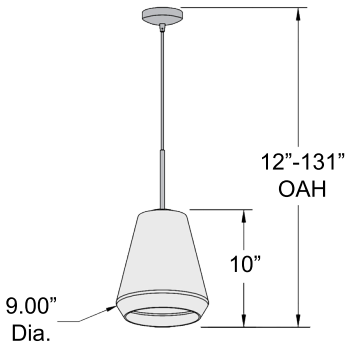

50937LEDDLP-BL/CLR

LED Pendant
Black Finish
Clear Glass
9’’DIA. x 10’’H x 12’’-131’’OAH
1 x 5 W E-26 Replaceable LED (Included)
380 Nominal Lumens
2200K, 80 CRI, 120v
Dimmable
Damp Location
UL (US/Canada) Listed
10 Feet of Black Cord Included

50938-BL/CLR

Pendant

Black Finish
Clear Glass
11''DIA. x 11.5''H x 13''-132''OAH
1 x 60 W E-26 Incandescent
120v
Dimmable
Damp Location
UL (US/Canada) Listed
10 Feet of Black Cord Included

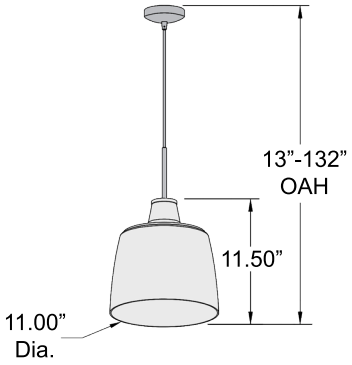

SIMPLICITE

50938LEDDLP-BL/CLR

LED Pendant

Black Finish
Clear Glass
11''DIA. x 11.5''H x 13''-132''OAH
1 x 5 W E-26 Replaceable LED (Included)
380 Nominal Lumens
2200K, 80 CRI, 120v
Dimmable
Damp Location
UL (US/Canada) Listed
10 Feet of Black Cord Included

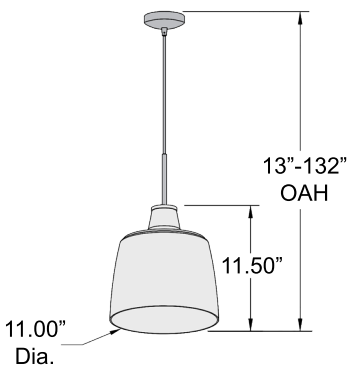

SIMPLICITE

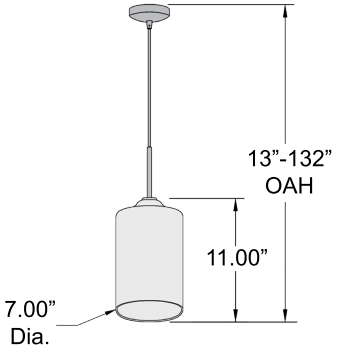

50935-BCH/MIR

Pendant

Black Chrome Finish
Mirror Glass
7’’DIA. x 11’’H x 13’’-132’’OAH
1 x 60 W E-26 Incandescent
120v
Dimmable
Damp Location
UL (US/Canada) Listed
10 Feet of Black Cord Included

SIMPLICITE

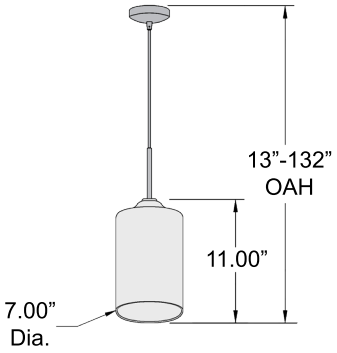

50935LEDDLP-BCH/MIR

LED Pendant

Black Chrome Finish
Mirror Glass
7’’DIA. x 11’’H x 13’’-132’’OAH
1 x 5 W E-26 Replaceable LED (Included)
380 Nominal Lumens
2200K, 80 CRI, 120v
Dimmable
Damp Location
UL (US/Canada) Listed
10 Feet of Black Cord Included

50936-BCH/MIR

Pendant

Black Chrome Finish
Mirror Glass
9.5''DIA. x 12.25''H x 14''-133''OAH
1 x 60 W E-26 Incandescent
120v
Dimmable
Damp Location
UL (US/Canada) Listed
10 Feet of Black Cord Included

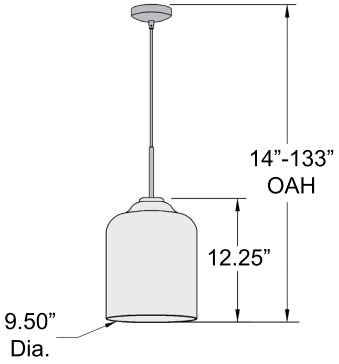

SIMPLICITE

50936LEDDLP-BCH/MIR

LED Pendant

Black Chrome Finish
Mirror Glass
9.5''DIA. x 12.25''H x 14''-133''OAH
1 x 5 W E-26 Replaceable LED (Included)
380 Nominal Lumens
2200K, 80 CRI, 120v
Dimmable
Damp Location
UL (US/Canada) Listed
10 Feet of Black Cord Included

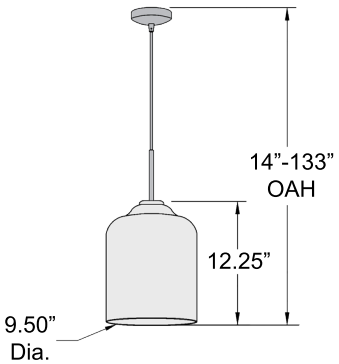

GLOW

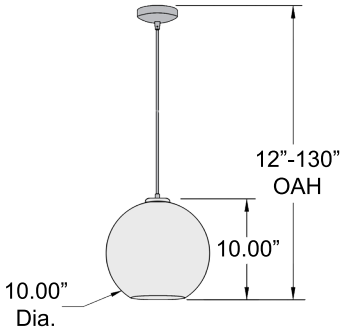

28101-BCP/CP

Pendant

Brushed Copper Finish
Copper Glass
10’’DIA. x 10’’H x 12’’-130’’OAH
1 x 60 W E-26 Incandescent
120v
Dimmable
Dry Location
ETL (US/Canada) Listed
10 Feet of Clear Cord Included

GLOW

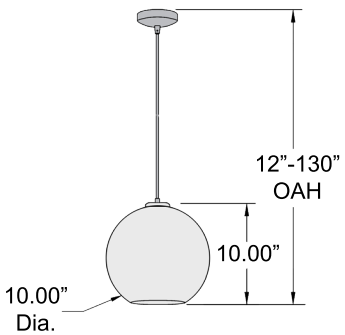

28101LEDDLP-BCP/CP

LED Pendant

Brushed Copper Finish
Copper Glass
10’’DIA. x 10’’H x 12’’-130’’OAH
1 x 10 W E-26 Replaceable LED (Included)
800 Nominal Lumens
3000K, 90 CRI, 120v
Dimmable
Dry Location
ETL (US/Canada) Listed
Energy Star, JA8-2016/Title 24 Listed, Title 20
10 Feet of Clear Cord Included

28102-BCP/CP

Pendant

Brushed Copper Finish
Copper Glass
12''DIA. x 12''H x 14''-132''OAH
1 x 100 W E-26 Incandescent
120v
Dimmable
Dry Location
ETL (US/Canada) Listed
10 Feet of Clear Cord Included

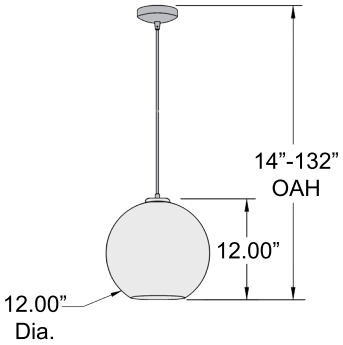

GLOW

28102LEDDLP-BCP/CP

LED Pendant

Brushed Copper Finish
Copper Glass
12''DIA. x 12''H x 14''-130''OAH
1 x 10 W E-26 Replaceable LED (Included)
800 Nominal Lumens
3000K, 90 CRI, 120v
Dimmable
Dry Location
ETL (US/Canada) Listed
Energy Star, JA8-2016/Title 24 Listed, Title 20
10 Feet of Clear Cord Included

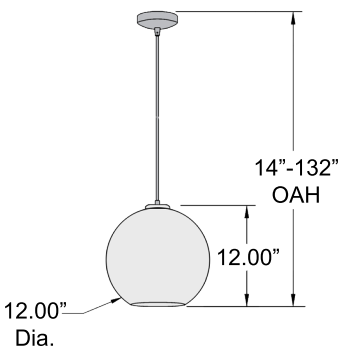

NOSTALGIA

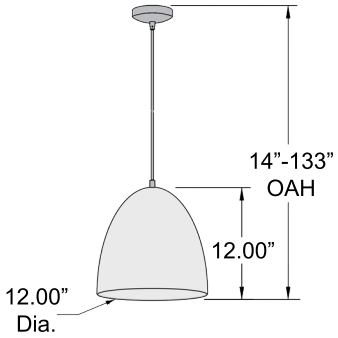

23776-MBL/MGL

Pendant

Matte Black Finish

Matte Gold

12’’DIA. x 12’’H x 14’’-133’’OAH

1 x 60 W E-26 Incandescent

120v

Dimmable

Dry Location

UL (US/Canada) Listed

10 Feet of Black Cord Included

NOSTALGIA

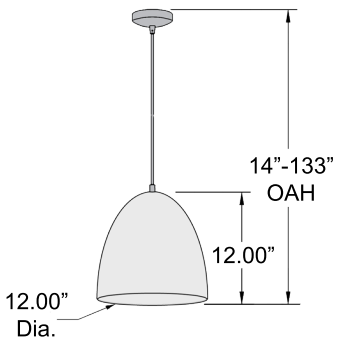

23776LEDDLP-MBL/MGL

LED Pendant

Matte Black Finish

Matte Gold

12’’DIA. x 12’’H x 14’’-133’’OAH

1 x 10 W E-26 Replaceable LED (Included)

800 Nominal Lumens

3000K, 93 CRI, 120v

Dimmable

Dry Location

UL (US/Canada) Listed

Energy Star, JA8-2016/Title 24 Listed, Title 20

10 Feet of Black Cord Included

23778-MBL/MGL

Pendant

Matte Black Finish
Matte Gold
10''DIA. x 10.5''H x 12''-131''OAH
1 x 60 W E-26 Incandescent
120v
Dimmable
Dry Location
ETL (US/Canada) Listed
10 Feet of Black Cord Included

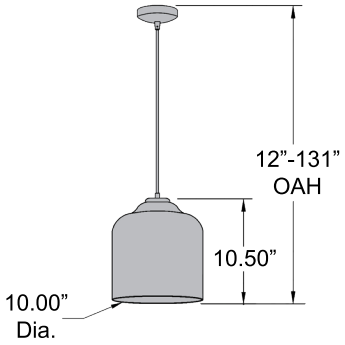

NOSTALGIA

23778LEDDLP-MBL/MGL

LED Pendant

Matte Black Finish
Matte Gold
10''DIA. x 10.5''H x 12''-131''OAH
1 x 10 W E-26 Replaceable LED (Included)
800 Nominal Lumens
2700K, 93 CRI, 120v
Dimmable
Dry Location
ETL (US/Canada) Listed
Energy Star, JA8-2016/Title 24 Listed, Title 20
10 Feet of Black Cord Included

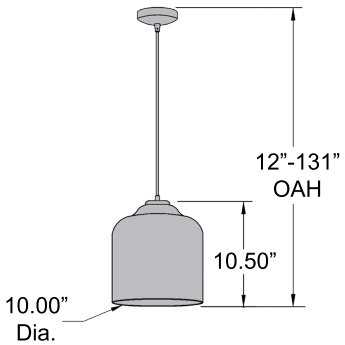

BLEND

52057LEDDLP-BL/WGN
Black with Wood Grain Finish

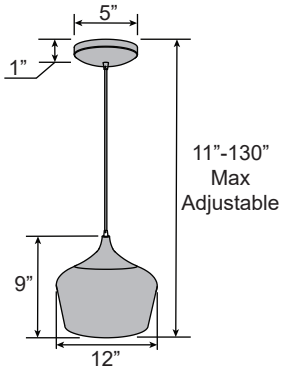

52057LEDDLP-WH/WGN
LED Pendant
White with Wood Grain Finish
12’’DIA. x 9’’H x 11’’-130’’OAH
1 x 10 W E-26 Replaceable LED (Included)
800 Nominal Lumens
3000K, 90 CRI, 120v
Dimmable
Dry Location
UL (US/Canada) Listed
JA8-2016/Title 24 Listed, Title 20
10 Feet of White Cord Included

NOSTALGIA

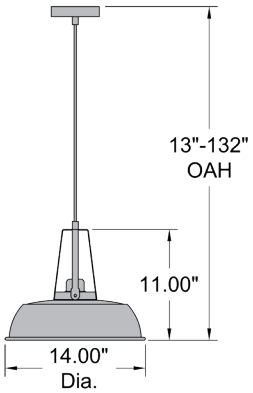

23777-MBL/MGL
Pendant
Matte Black Finish
Matte Gold
14’’DIA. x 11’’H x 13’’-132’’OAH
1 x 60 W E-26 Incandescent
120v
Dimmable
Dry Location
UL (US/Canada) Listed
10 Feet of Black Cord Included

SOLERO

SOLERO

20469LEDD-BS/ACR

LED Pendant or Semi-Flush

Brushed Steel Finish
Acrylic Lens
16''DIA. x 5''H x 13''-51''OAH
1 x 25 W SSL Dedicated LED (Included)
1765 Delivered Lumens
3000K, 90 CRI, 120v
Dimmable
Damp Location
ETL (US/Canada) Listed
10 Feet of Cord Included
6, 16, and 22-inch Down Rods Included
Optional 6, 16, and 22-inch Down Rods Available

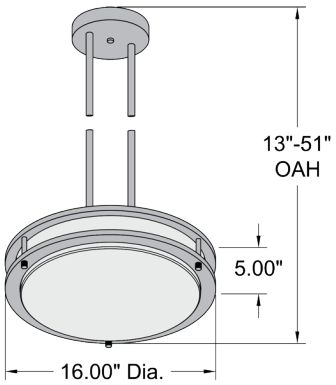

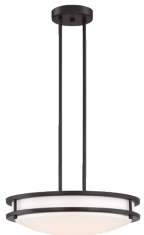

20469LEDD-BRZ/ACR
Bronze Finish

23891LEDDLP-BL
Black Finish

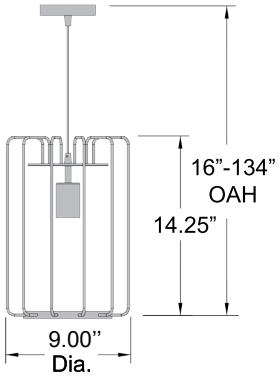

23891LEDDLP-GLD
LED Pendant
Gold Finish
9’’DIA. x 14.25’’H x 16’’-134.25’’OAH
1 x 7 W E-26 Replaceable LED (Included)
800 Delivered Lumens
2700K, 82 CRI, 120v
Dimmable
Dry Location
UL (US/Canada) Listed
Title 20
10 Feet of Black Cord Included

23890LEDDLP-BL

LED Pendant

Black Finish
23.25''DIA. x 9''H x 11''-129''OAH
1 x 7 W E-26 Replaceable LED (Included)
800 Delivered Lumens
2700K, 82 CRI, 120v
Dimmable
Dry Location
UL (US/Canada) Listed
Title 20
10 Feet of Aircraft Cable and Cord Included

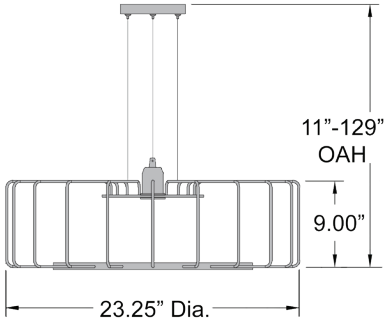

23890LEDDLP-GLD
Gold Finish

CAFE

72010LEDDLP-ABB
Antique Brushed Brass Finish

72010LEDDLP-BRZ
Bronze Finish

72010LEDDLP-MWH
Matte White Finish

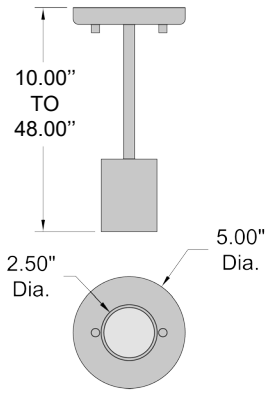

72010LEDDLP-MBL

1 Light Wall or Ceiling LED Spot

Matte Black Finish
Steel Shade
2.5''DIA. x 3.5''H x 10''-48''OAH
1 x 5.5 W GU-10 Replaceable LED (Included)
500 Nominal Lumens
3000K, 90 CRI, 120v
Dimmable
Damp Location
UL (US/Canada) Listed
JA8-2016/Title 24 Listed
Sloped Ceiling Adapter Included
10 Feet of Cord Included
6, 16, and 22-inch Down Rods Included
Optional 6, 16, and 22-inch Down Rods Available

PILSON

29000LEDDLP-MBL
Matte Black Finish

29000LEDDLP-MWH
Matte White Finish

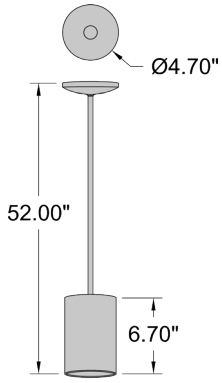

29000LEDDLP-SAT
LED Pendant
Satin Finish
Steel Shade
4.5''DIA. x 6.5''H
1 x 10 W E-26 Replaceable LED (Included)
800 Nominal Lumens
3000K, 90 CRI, 120v
Dimmable
Damp Location
UL (US/Canada) Listed
JA8-2016/Title 24 Listed, Title 20
Sloped Ceiling Adapter Included
10 Feet of Cord Included
6, 16, and 22-inch Down Rods Included
Optional 6, 16, and 22-inch Down Rods Available

PILSON

29001LEDDLP-MBL
Matte Black Finish

29001LEDDLP-SAT
Satin Finish

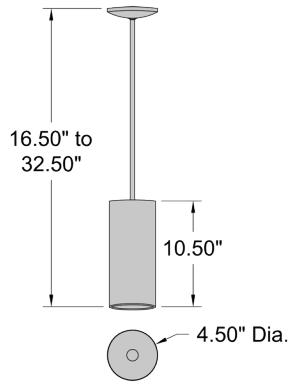

29001LEDDLP-MWH
LED Pendant
Matte White Finish
Steel Shade
4.5''DIA. x 10.5''H
1 x 10 W E-26 Replaceable LED (Included)
800 Nominal Lumens
3000K, 90 CRI, 120v
Dimmable
Damp Location
UL (US/Canada) Listed
JA8-2016/Title 24 Listed, Title 20
Sloped Ceiling Adapter Included
10 Feet of Cord Included
6, 16, and 22-inch Down Rods Included
Optional 6, 16, and 22-inch Down Rods Available

29002LEDDLP-MBL

LED Pendant

Matte Black Finish
Steel Shade
4.5''DIA. x 14.5''H
1 x 10 W E-26 Replaceable LED (Included)
800 Nominal Lumens
3000K, 90 CRI, 120v
Dimmable
Damp Location
UL (US/Canada) Listed
JA8-2016/Title 24 Listed, Title 20
Sloped Ceiling Adapter Included
10 Feet of Cord Included
6, 16, and 22-inch Down Rods Included
Optional 6, 16, and 22-inch Down Rods Available

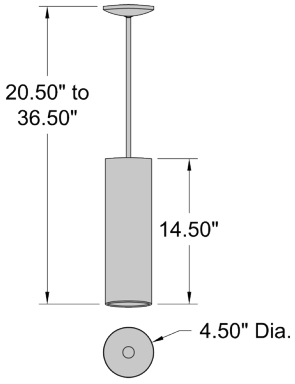

29002LEDDLP-MWH
Matte White Finish

29002LEDDLP-SAT
Satin Finish

PORT NINE

63140LEDD-ABB/CLR
Antique Brushed Brass Finish

63140LEDD-MBL/CLR
Matte Black Finish

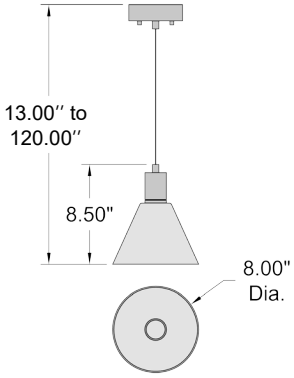

63140LEDD-BS/CLR
Martini LED Pendant
Brushed Steel Finish
Clear Glass
8''DIA. x 8.5''H x 13''-120''OAH
1 x 9 W SSL Dedicated LED (Included)
506 Delivered Lumens
3000K, 90 CRI, 120v
Dimmable
Damp Location
ETL (US/Canada) Listed
JA8-2016/Title 24 Listed
10 Feet of Aircraft Cable Included

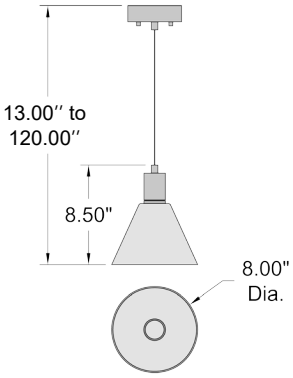

63140LEDD-ABB/SDG

Martini LED Pendant

Antique Brushed Brass Finish
Seeded Glass
8''DIA. x 8.5''H x 13''-120''OAH
1 x 9 W SSL Dedicated LED (Included)
600 Nominal Lumens
3000K, 90 CRI, 120v
Dimmable
Damp Location
ETL (US/Canada) Listed
JA8-2016/Title 24 Listed
10 Feet of Aircraft Cable Included

63140LEDD-BS/SDG
Brushed Steel Finish

63140LEDD-MBL/SDG
Matte Black Finish

63141LEDD-BS/CLR
Brushed Steel Finish

63141LEDD-MBL/CLR
Matte Black Finish

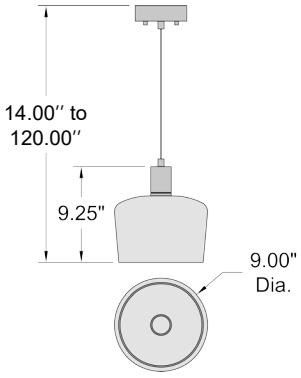

63141LEDD-ABB/CLR
Chardonnay LED Pendant
Antique Brushed Brass Finish
Clear Glass
9''DIA. x 9.25''H x 14''-120''OAH
1 x 9 W SSL Dedicated LED (Included)
506 Delivered Lumens
3000K, 90 CRI, 120v
Dimmable
Damp Location
ETL (US/Canada) Listed
JA8-2016/Title 24 Listed
10 Feet of Aircraft Cable Included

63141LEDD-MBL/SDG

Chardonnay LED Pendant

Matte Black Finish
Seeded Glass
9''DIA. x 9.25''H x 14''-120''OAH
1 x 9 W SSL Dedicated LED (Included)
506 Delivered Lumens
3000K, 90 CRI, 120v
Dimmable
Damp Location
ETL (US/Canada) Listed
JA8-2016/Title 24 Listed
10 Feet of Aircraft Cable Included

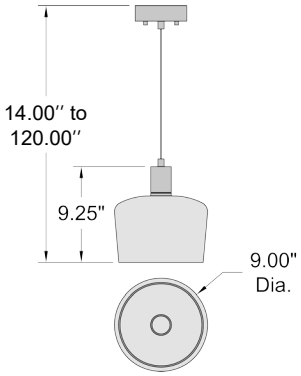

63141LEDD-ABB/SDG
Antique Brushed Brass Finish

63141LEDD-BS/SDG
Brushed Steel Finish

63142LEDD-ABB/CLR
Antique Brushed Brass Finish

63142LEDD-BS/CLR
Brushed Steel Finish

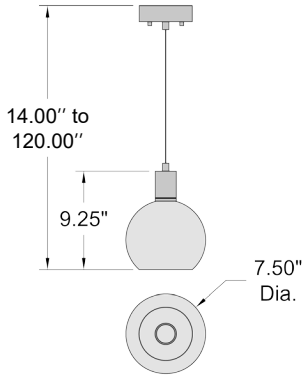

63142LEDD-MBL/CLR
Burgundy LED Pendant
Matte Black Finish
Clear Glass
7.5''DIA. x 9.5''H x 14''-120''OAH
1 x 9 W SSL Dedicated LED (Included)
506 Delivered Lumens
3000K, 90 CRI, 120v
Dimmable
Damp Location
ETL (US/Canada) Listed
JA8-2016/Title 24 Listed
10 Feet of Aircraft Cable Included

63142LEDD-BS/SDG

Burgundy LED Pendant

Brushed Steel Finish
Seeded Glass
7.5''DIA. x 9.5''H x 14''-120''OAH
1 x 9 W SSL Dedicated LED (Included)
506 Delivered Lumens
3000K, 90 CRI, 120v
Dimmable
Damp Location
ETL (US/Canada) Listed
JA8-2016/Title 24 Listed
10 Feet of Aircraft Cable Included

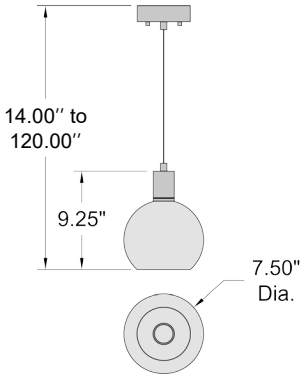

63142LEDD-ABB/SDG
Antique Brushed Brass Finish

63142LEDD-MBL/SDG
Matte Black Finish

BOULDER

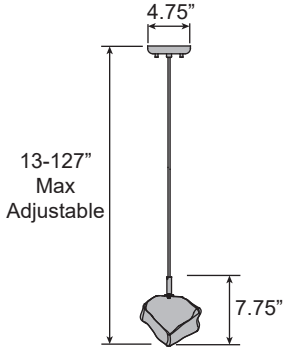

63128LEDDLP-MSS/CLR

LED Pendant

Chrome Finish

Clear Glass

6.75’’L x 6.75’’W x 13’’H x 13’’-127’’OAH

1 x 4.5 W G9 Replaceable LED (Included)

450 Nominal Lumens

3000K, 80 CRI, 120v

Dimmable

Dry Location

UL (US/Canada) Listed

Title 20

10 Feet of Clear Coated Cord Included

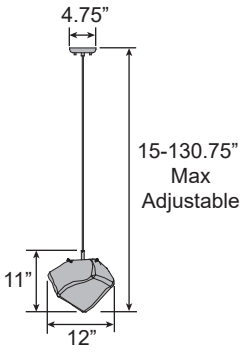

63126LEDDLP-MSS/CLR

LED Pendant

Chrome Finish
Clear Glass
12’’L x 12’’W x 11’’H x 15’’-130.75’’OAH
1 x 5 W E-26 Replaceable LED (Included)
380 Nominal Lumens
2200K, 80 CRI, 120v
Dimmable
Dry Location
UL (US/Canada) Listed
Title 20
10 Feet of Clear Coated Cord Included

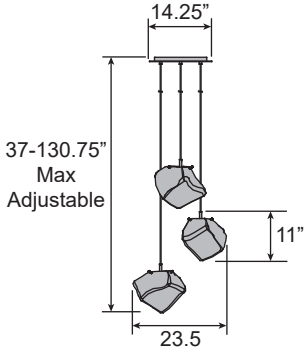

63127LEDDLP-MSS/CLR

3 Light LED Cluster Pendant

Mirrored Stainless Steel Finish
Clear Glass
23.5’’DIA. x 33’’H x 37’’-130.75’’OAH
3 x 5 W E-26 Replaceable LED (Included)
1140 Nominal Lumens
2200K, 80 CRI, 120v
Dimmable
Dry Location
UL (US/Canada) Listed
Title 20
10 Feet of Clear Coated Cord Included

HOME
Philosophy

ICICLE

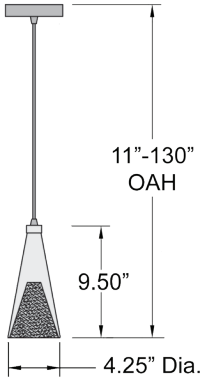

50543-CH/CLOP

Pendant

Chrome Finish
Clear Opal Glass
4.25’’DIA. x 9.5’’H x 11’’-130’’OAH
1 x 40 W G9 Halogen (Included)
480 Nominal Lumens
2900K, 120v
Dimmable
Dry Location
UL (US/Canada) Listed
10 Feet of Clear Cord Included

ICICLE

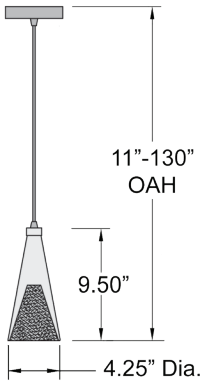

50543LEDDLP-CH/CLOP

LED Pendant

Chrome Finish
Clear Opal Glass
4.25’’DIA. x 9.5’’H x 11’’-130’’OAH
1 x 4.5 W G9 Replaceable LED (Included)
450 Nominal Lumens
2900K, 83 CRI, 120v
Dimmable
Dry Location
UL (US/Canada) Listed
Title 20
10 Feet of Clear Cord Included

50514-BS/FRC

Pendant

Brushed Steel Finish
Frosted Clear Glass
5''DIA. x 9''H x 11''-125''OAH
1 x 60 W E-26 Incandescent
120v
Dimmable
Dry Location
ETL (US/Canada) Listed
10 Feet of Cable and Cord Included

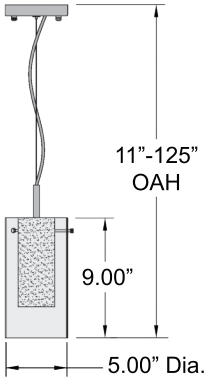

PROTEUS

50514LEDDLP-BS/FRC

LED Pendant

Brushed Steel Finish
Frosted Clear Glass
5''DIA. x 9''H x 11''-125''OAH
1 x 10 W E-26 Replaceable LED (Included)
800 Nominal Lumens
3000K, 90 CRI, 120v
Dimmable
Dry Location
ETL (US/Canada) Listed
Energy Star, JA8-2016/Title 24 Listed, Title 20
10 Feet of Cable and Cord Included

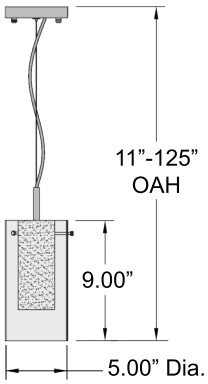

SPARTAN

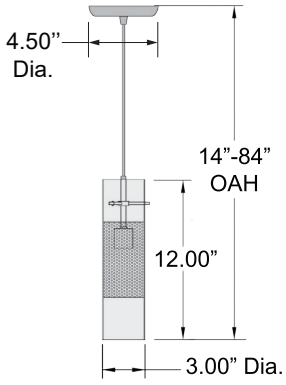

50525-BS/CLM

Pendant

Brushed Steel Finish
Metal Mesh in Clear Glass
4.5’’W x 3’’DIA. x 12’’H x 14’’-84’’OAH
1 x 35 W GU-10 Halogen (Included)
320 Nominal Lumens
2900K, 120v
Dimmable
Dry Location
UL (US/Canada) Listed
6 Feet of Clear Cord Included

SPARTAN

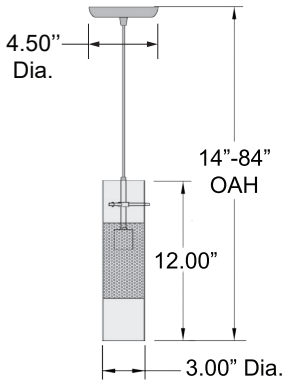

50525LEDDLP-BS/CLM

LED Pendant

Brushed Steel Finish
Metal Mesh in Clear Glass
4.5’’W x 3’’DIA. x 12’’H x 14’’-84’’OAH
1 x 5.5 W GU-10 Replaceable LED (Included)
500 Nominal Lumens
3000K, 90 CRI, 120v
Dimmable
Dry Location
UL (US/Canada) Listed
Title 20
6 Feet of Clear Cord Included

50526-BS/CLM

3 Light Cluster Pendant

Brushed Steel Finish
Metal Mesh in Clear Glass
10''W x 3''DIA. x 12''H x 14''-84''OAH
3 x 35 W GU-10 Halogen (Included)
960 Nominal Lumens
2900K, 120v
Dimmable
Dry Location
UL (US/Canada) Listed
6 Feet of Clear Cord Included

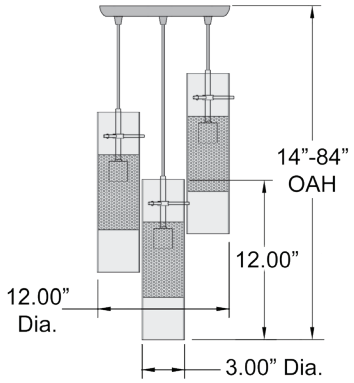

SPARTAN

50526LEDDLP-BS/CLM

3 Light LED Cluster Pendant

Brushed Steel Finish
Metal Mesh in Clear Glass
10''W x 3''DIA. x 12''H x 14''-84''OAH
3 x 5.3 W GU-10 Replaceable LED (Included)
1140 Nominal Lumens
3000K, 85 CRI, 120v
Dimmable
Dry Location
UL (US/Canada) Listed
Title 20
6 Feet of Clear Cord Included

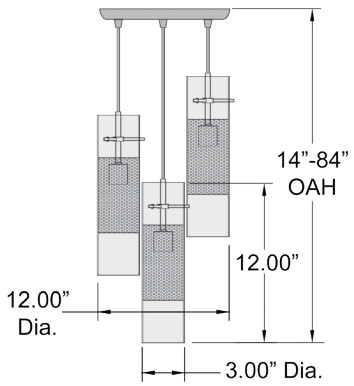

MULTIS

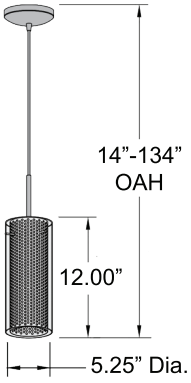

63987-BCH/CLR

Pendant

Black Chrome Finish
Clear Glass
5.25’’DIA. x 12’’H x 14’’-134’’OAH
1 x 60 W E-26 Incandescent
120v
Dimmable
Dry Location
UL (US/Canada) Listed
10 Feet of Black Cord Included

MULTIS

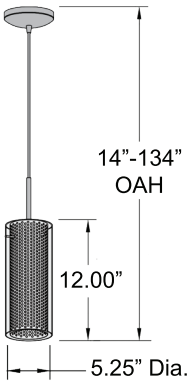

63987LEDDLP-BCH/CLR

LED Pendant

Black Chrome Finish
Clear Glass
5.25’’DIA. x 12’’H x 14’’-134’’OAH
1 x 10 W E-26 Replaceable LED (Included)
800 Nominal Lumens
3000K, 90 CRI, 120v
Dimmable
Dry Location
UL (US/Canada) Listed
JA8-2016/Title 24 Listed, Title 20
10 Feet of Black Cord Included

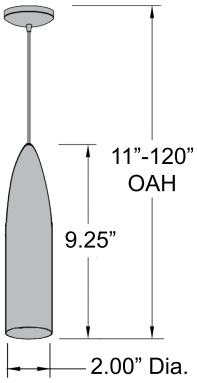

52001LEDLP-BS

LED Pendant

Brushed Steel Finish
Metal
2’’W x 2’’DIA. x 9.25’’H x 11’’-120’’OAH
1 x 6 W GU-5.3 Replaceable LED (Included)
450 Nominal Lumens
3000K, 80 CRI, 120v
Dry Location
ETL (US/Canada) Listed
Title 20
10 Feet of Coated Co-Axial Cable Included

IRON

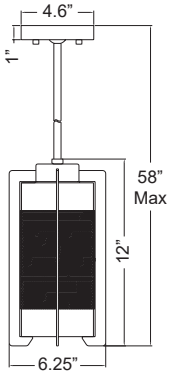

20738-BS/OPL

Pendant

Brushed Steel Finish
Opal Glass
6.25’’DIA. x 12’’H x 13’’-58’’OAH
1 x 100 W E-26 Incandescent
120v
Dimmable
Dry Location
UL (US/Canada) Listed
10 Feet of Cable Included
6, 16, and 22-inch Down Rods Included
Optional 6, 16, and 22-inch Down Rods Available

IRON

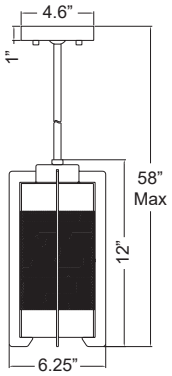

20738LEDDLP-BS/OPL

LED Pendant

Brushed Steel Finish
Opal Glass
6.25’’DIA. x 12’’H x 13’’-58’’OAH
1 x 10 W E-26 Replaceable LED (Included)
800 Nominal Lumens
3000K, 90 CRI, 120v
Dimmable
Dry Location
UL (US/Canada) Listed
Energy Star, JA8-2016/Title 24 Listed, Title 20
10 Feet of Cable Included
6, 16, and 22-inch Down Rods Included
Optional 6, 16, and 22-inch Down Rods Available

TOMAHAWK

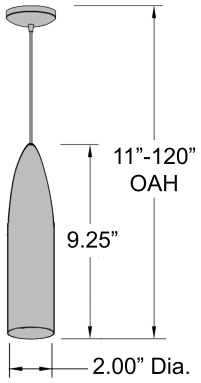

52070LEDDLP-BS

LED Pendant

Brushed Steel Finish
Metal
2’’W x 2’’DIA. x 9.25’’H x 11’’-120’’OAH
1 x 6 W GU-5.3 Replaceable LED (Included)
450 Nominal Lumens
3000K, 80 CRI, 12v
Dry Location
ETL (US/Canada) Listed
Title 20
10 Feet of Coated Co-Axial Cable Included

PENDANTS

White Glass
Maya Glass
Red Glass
Inca Glass
Brown Stone Glass
White Stone Glass
Red Sky Glass

28012 SERIES

28011 SERIES

For Additional Pendant Options Visit our website at www.AccessLighting.com

See Page 426 for the Appropriate Glass Finish Code

Purple Cloud Glass
Purple Swirl Glass

28078 SERIES

White Glass
Amber Glass
Red Glass

28030 SERIES

For Additional Pendant Options Visit our website at www.AccessLighting.com

See Page 426 for the Appropriate Glass Finish Code

28004 SERIES

28023 SERIES

For Additional Pendant Options Visit our website at www.AccessLighting.com
See Page 426 for the Appropriate Glass Finish Code

28033 SERIES

28069 SERIES

For Additional Pendant Options Visit our website at www.AccessLighting.com
See Page 426 for the Appropriate Glass Finish Code

CAFE MENU
Americano $4.99
Espresso $3.00
Latte $4.99
Vanilla Latte $4.75
Capuccino $6.99
Mocha $5.99
Chocolate $4.99

CAFE

DIRECTIONAL

TRANSFORMER

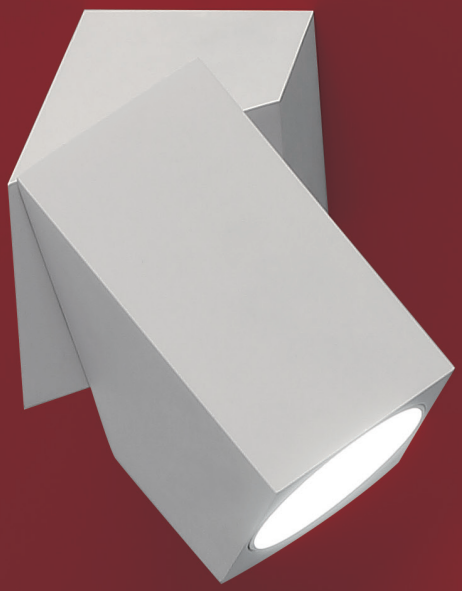

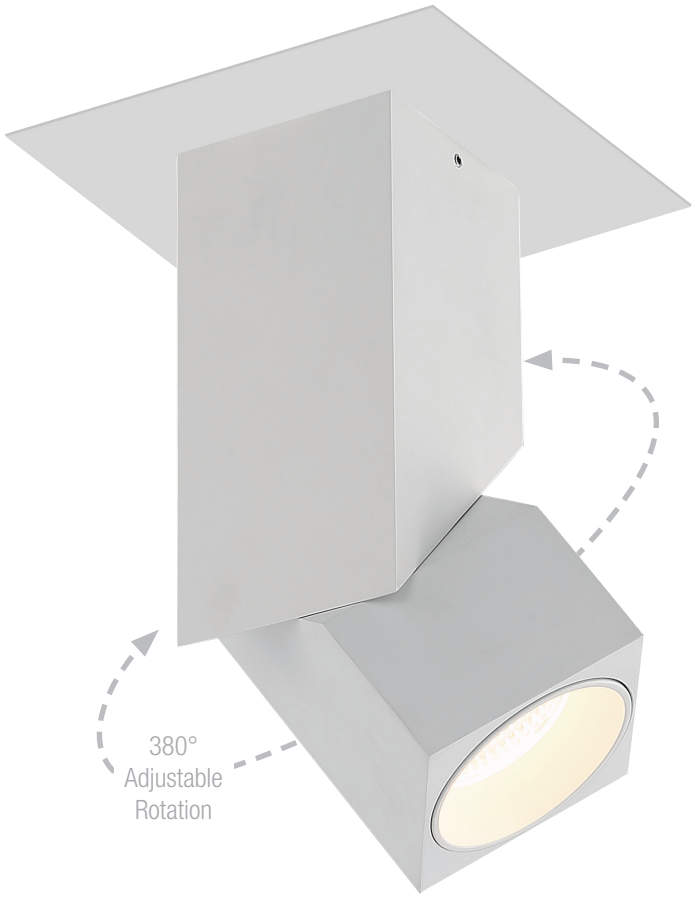

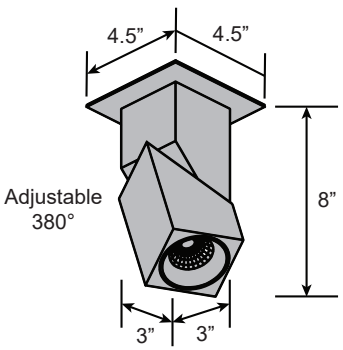

50011LEDD-WH/CLR

Dual Voltage Adjustable LED Spotlight

White Finish
Clear Glass
3’’L x 3’’W x 8’’H
1 x 11 W SSL Dedicated LED (Included)
985 Delivered Lumens
3000K, 85 CRI, 120-277v
Dimmable
Damp Location
UL (US/Canada) Listed

50011LEDD-BL/CLR
Black Finish

CAFE

72010LEDDLP-ABB
Antique Brushed Brass Finish

72010LEDDLP-MBL
Matte Black Finish

72010LEDDLP-MWH
Matte White Finish

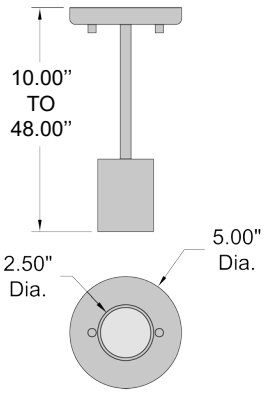

72010LEDDLP-BRZ

1 Light Wall or Ceiling LED Spotlight

Bronze Finish
Steel Shade
2.5''DIA. x 3.5''H x 10''-48''OAH
1 x 5.5 W GU-10 Replaceable LED (Included)
500 Nominal Lumens
3000K, 90 CRI, 120v
Dimmable
Damp Location
UL (US/Canada) Listed
JA8-2016/Title 24 Listed
Sloped Ceiling Adapter Included
10 Feet of Cord Included
6, 16, and 22-inch Down Rods Included
Optional 6, 16, and 22-inch Down Rods Available

72010LEDDLP-ABB

1 Light Wall or Ceiling LED Spotlight

Antique Brushed Brass Finish
Steel Shade
2.5''DIA. x 3.5''H x 10''-48''OAH
1 x 5.5 W GU-10 Replaceable LED (Included)
500 Nominal Lumens
3000K, 90 CRI, 120v
Dimmable
Damp Location
UL (US/Canada) Listed
JA8-2016/Title 24 Listed
Sloped Ceiling Adapter Included
10 Feet of Cord Included
6, 16, and 22-inch Down Rods Included
Optional 6, 16, and 22-inch Down Rods Available

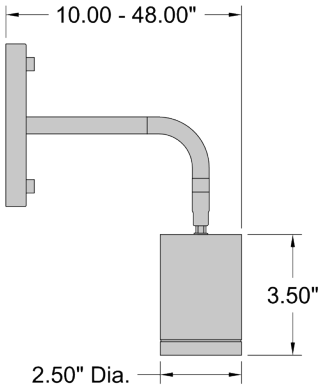

72010LEDDLP-BRZ
Bronze Finish

72010LEDDLP-MBL
Matte Black Finish

72010LEDDLP-MWH
Matte White Finish

LINCOLN

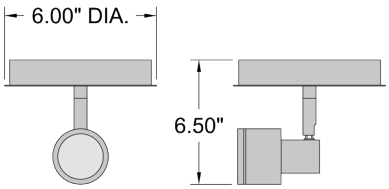

63071LEDDLP-BS

1 Light Adjustable LED Spotlight

Brushed Steel Finish
6''DIA. x 6.5''H
3 x 5.5 W GU-10 Replaceable LED (Included)
500 Nominal Lumens
3000K, 90 CRI, 120v
Dimmable
Dry Location
UL (US/Canada) Listed
JA8-2016/Title 24 Listed

LINCOLN

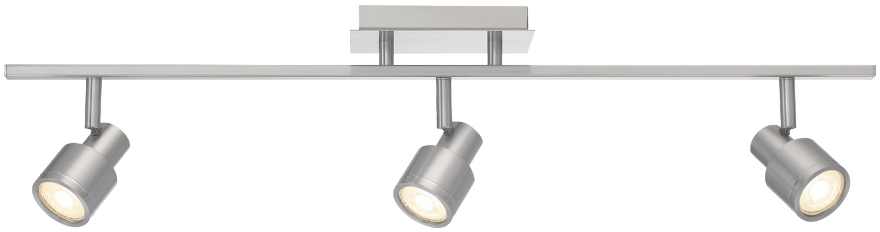

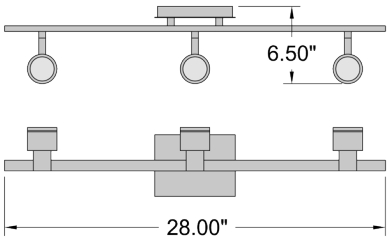

63073LEDDLP-BS

3 Light Adjustable LED Track

Brushed Steel Finish
28''W x 6.5''H x 4.5''Ext.
3 x 5.5 W GU-10 Replaceable LED (Included)
1500 Nominal Lumens
3000K, 90 CRI, 120v
Dimmable
Dry Location
UL (US/Canada) Listed
JA8-2016/Title 24 Listed

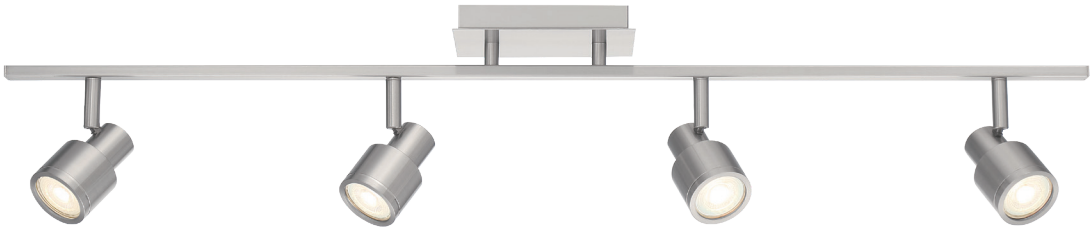

63074LEDDLP-BS

4 Light Adjustable LED Track

Brushed Steel Finish
35''W x 6.5''H x 4.5''Ext.
4 x 5.5 W GU-10 Replaceable LED (Included)
2000 Nominal Lumens
3000K, 90 CRI, 120v
Dimmable
Dry Location
UL (US/Canada) Listed
JA8-2016/Title 24 Listed

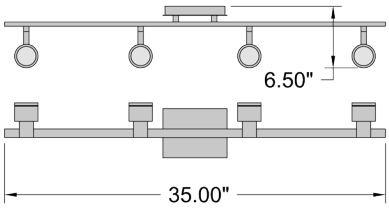

LINCOLN

63075LEDDLP-BS

5 Light Adjustable LED Track

Brushed Steel Finish
43''W x 6.5''H x 4.5''Ext.
5 x 5.5 W GU-10 Replaceable LED (Included)
2500 Nominal Lumens
3000K, 90 CRI, 120v
Dimmable
Dry Location
UL (US/Canada) Listed
JA8-2016/Title 24 Listed

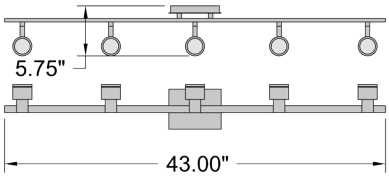

VIPER

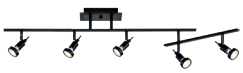

52042LEDDLP-BL
Black Finish

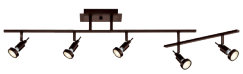

52042LEDDLP-BRZ
Bronze Finish

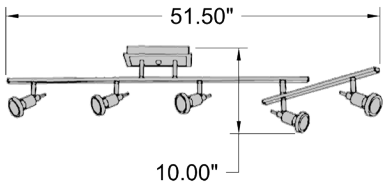

52042LEDDLP-BS
5 Light Adjustable LED Track
Brushed Steel Finish
51.5''L x 10''H
5 x 5.3 W GU-10 Replaceable LED (Included)
1900 Nominal Lumens
3000K, 83 CRI, 120v
Dimmable
Dry Location
ETL (US/Canada) Listed
Title 20

VIPER

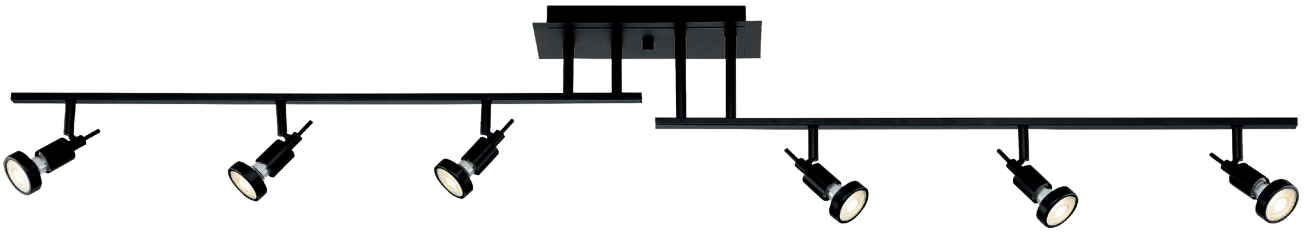

52043LEDDLP-BRZ
Bronze Finish

52043LEDDLP-BL

6 Light Adjustable LED Track

Black Finish
62''L x 9''H
6 x 5.5 W GU-10 Replaceable LED (Included)
2400 Nominal Lumens
3000K, 90 CRI, 120v
Dimmable
Dry Location
UL (US/Canada) Listed
JA8-2016/Title 24 Listed, Title 20

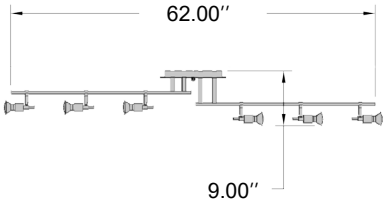

52043LEDDLP-BS
Brushed Steel Finish

COBRA

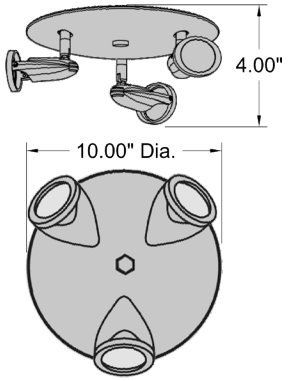

52103-BS

3 Light Adjustable LED Spotlight

Brushed Steel Finish
10''DIA. x 4''H
3 x 50 W GU-10 Halogen
120v
Dimmable
Dry Location
ETL (US/Canada) Listed

COBRA

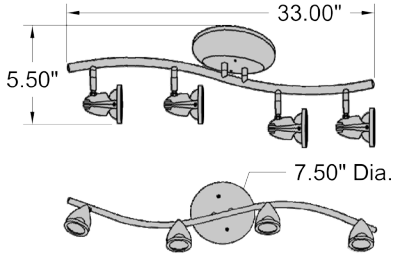

52204-BS

4 Light Adjustable Track

Brushed Steel Finish
33''L x 5.5''H
4 x 50 W GU-10 Halogen
120v
Dimmable
Dry Location
ETL (US/Canada) Listed

52205-BS

3 Light Adjustable Pendant

Brushed Steel Finish
27''L x 3.75''H x 6''-50''OAH
3 x 50 W GU-10 Halogen
120v
Dimmable
Dry Location
ETL (US/Canada) Listed
Sloped Ceiling Adapter Included
10 Feet of Cord Included
6, 16, and 22-inch Down Rods Included
Optional 6, 16, and 22-inch Down Rods Available

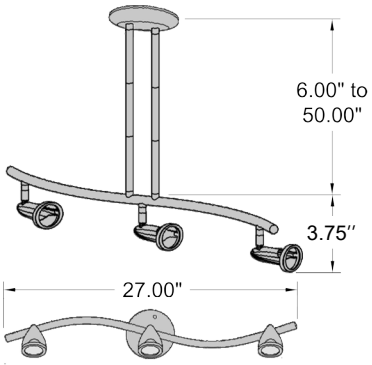

COBRA

52206-BS

4 Light Adjustable Pendant

Brushed Steel Finish
33''L x 3.75''H x 6''-50''OAH
4 x 50 W GU-10 Halogen
120v
Dimmable
Dry Location
ETL (US/Canada) Listed
Sloped Ceiling Adapter Included
10 Feet of Cord Included
6, 16, and 22-inch Down Rods Included
Optional 6, 16, and 22-inch Down Rods Available

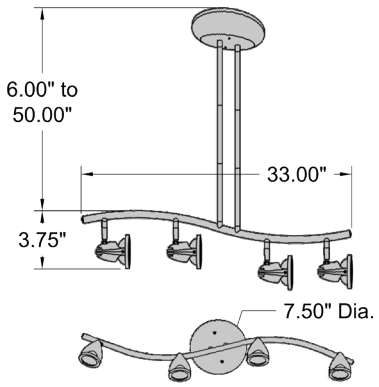

COBRA

52103LEDDLP-BS
Brushed Steel Finish

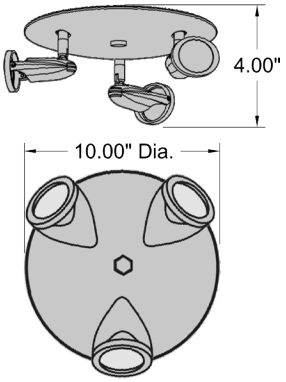

52103LEDDLP-BL
3 Light Adjustable LED Spotlight
Black Finish
10''DIA. x 4''H
3 x 5.5 W GU-10 Replaceable LED (Included)
1200 Nominal Lumens
3000K, 90 CRI, 120v
Dimmable
Dry Location
UL (US/Canada) Listed
JA8-2016/Title 24 Listed, Title 20

COBRA

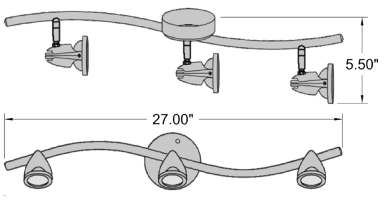

52203LEDDLP-BL
3 Light Adjustable LED Track
Black Finish
27''L x 5.5''H
3 x 5.5 W GU-10 Replaceable LED (Included)
1200 Nominal Lumens
3000K, 90 CRI, 120v
Dimmable
Dry Location
UL (US/Canada) Listed
JA8-2016/Title 24 Listed

COBRA

52204LEDDLP-BS

4 Light Adjustable LED Track

Brushed Steel Finish
33''L x 5.5''H
4 x 5.5 W GU-10 Replaceable LED (Included)
1600 Nominal Lumens
3000K, 90 CRI, 120v
Dry Location
UL (US/Canada) Listed
JA8-2016/Title 24 Listed

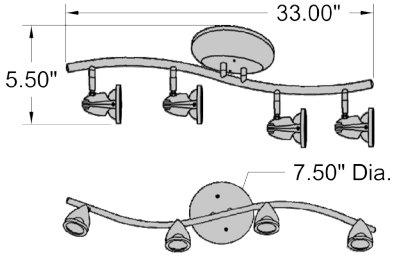

52204LEDDLP-BL
Black Finish

COBRA

52205LEDDLP-BL

3 Light Adjustable LED Pendant

Black Finish
27''L x 3.75''H x 6''-50''OAH
3 x 5.3 W GU-10 Replaceable LED (Included)
1140 Nominal Lumens
3000K, 90 CRI, 120v
Dimmable
Dry Location
UL (US/Canada) Listed
JA8-2016/Title 24 Listed
Sloped Ceiling Adapter Included
10 Feet of Cord Included
6, 16, and 22-inch Down Rods Included
Optional 6, 16, and 22-inch Down Rods Available

52205LEDDLP-BS
Brushed Steel Finish

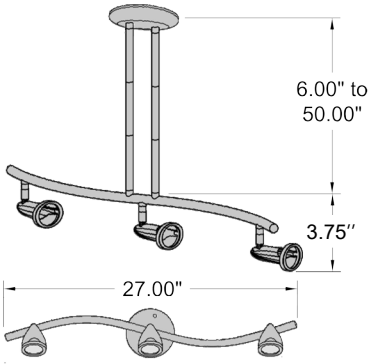

COBRA

52206LEDDLP-BS

4 Light Adjustable LED Pendant

Brushed Steel Finish
33''L x 3.75''H x 6''-50''OAH
4 x 5.3 W GU-10 Replaceable LED (Included)
1520 Nominal Lumens
3000K, 83 CRI, 120v
Dimmable
Dry Location
ETL (US/Canada) Listed
Title 20
Sloped Ceiling Adapter Included
10 Feet of Cord Included
6, 16, and 22-inch Down Rods Included
Optional 6, 16, and 22-inch Down Rods Available

52206LEDDLP-BL
Black Finish

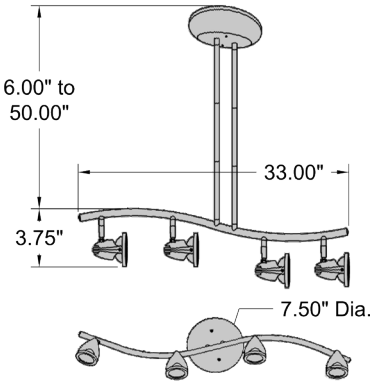

COMET

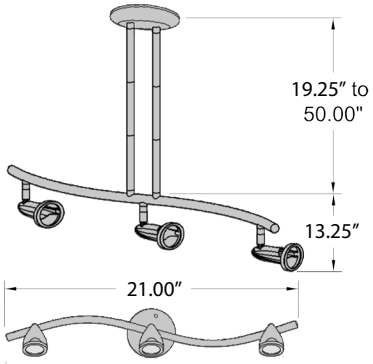

52030-BS/OPL
3 Light Adjustable Track
Brushed Steel Finish
Opal Glass
21''L x 13.25''H
3 x 35 W GU-10 Halogen
120v
Dimmable
Dry Location
ETL (US/Canada) Listed
Sloped Ceiling Adapter Included

COMET

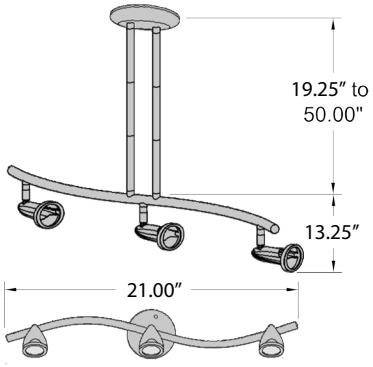

52030LEDDLP-BS/OPL
3 Light Adjustable LED Track
Brushed Steel Finish
Opal Glass
21''L x 13.25''H
3 x 5.5 W GU-10 Replaceable LED (Included)
1500 Nominal Lumens
3000K, 83 CRI, 120v
Dimmable
Dry Location
ETL (US/Canada) Listed
Title 20
Sloped Ceiling Adapter Included

52031-BS/OPL

5 Light Adjustable Track

Brushed Steel Finish
Opal Glass
71''L x 13.25''H
5 x 35 W GU-10 Halogen
120v
Dimmable
Dry Location
ETL (US/Canada) Listed
Sloped Ceiling Adapter Included

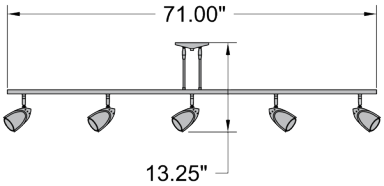

COMET

52031LEDDLP-BS/OPL

5 Light Adjustable LED Track

Brushed Steel Finish
Opal Glass
71''L x 13.25''H
5 x 5.5 W GU-10 Replaceable LED (Included)
2500 Nominal Lumens
3000K, 83 CRI, 120v
Dimmable
Dry Location
ETL (US/Canada) Listed
Title 20
Sloped Ceiling Adapter Included

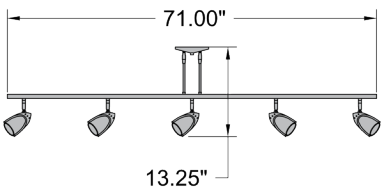

MIRAGE

52220LEDDLP-BS
Brushed Steel Finish

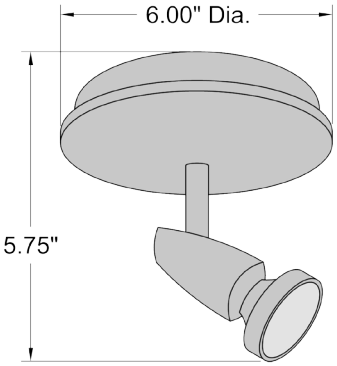

52220LEDDLP-BRZ
1 Light Adjustable LED Spotlight
Bronze Finish
6''DIA. x 5.75''H
1 x 5.3 W GU-10 Replaceable LED (Included)
380 Nominal Lumens
3000K, 83 CRI, 120v
Dimmable
Dry Location
ETL (US/Canada) Listed
Title 20

MIRAGE

52221LEDDLP-BRZ
Bronze Finish

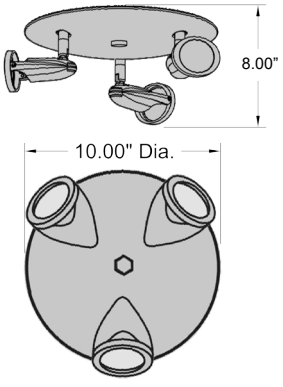

52221LEDDLP-BS
3 Light Adjustable LED Spotlight
Brushed Steel Finish
10''DIA. x 8''H
3 x 5.3 W GU-10 Replaceable LED (Included)
1140 Nominal Lumens
3000K, 83 CRI, 120v
Dimmable
Dry Location
ETL (US/Canada) Listed
Title 20

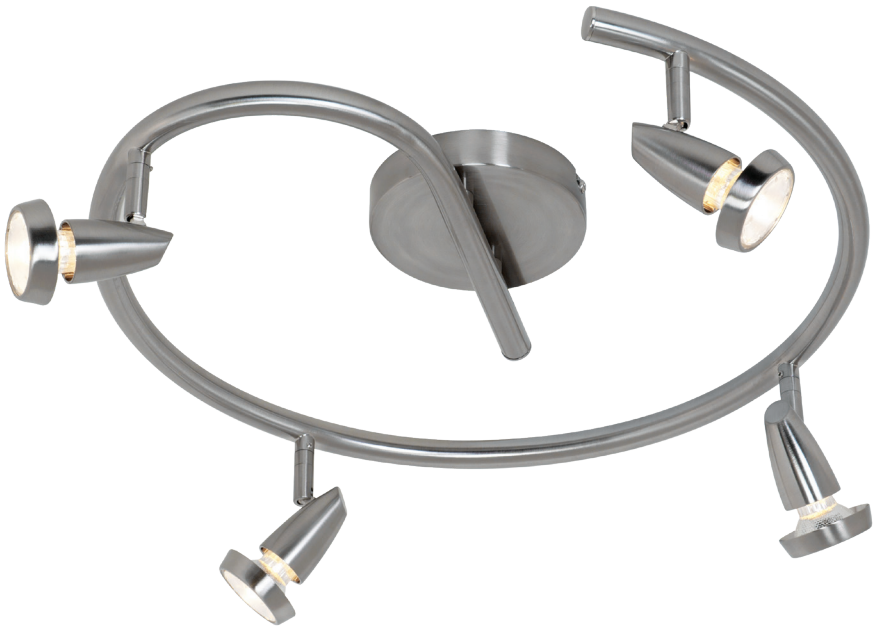

52222LEDDLP-BS

4 Light Adjustable Track

Brushed Steel Finish
18''DIA. x 6''H
4 x 5.3 W GU-10 Replaceable LED (Included)
1520 Nominal Lumens
3000K, 83 CRI, 120v
Dimmable
Dry Location
ETL (US/Canada) Listed
Title 20

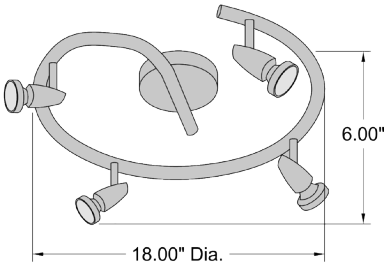

52222LEDDLP-BRZ
Bronze Finish

MIRAGE

52223LEDDLP-BS

3 Light Adjustable LED Pendant or Semi-Flush

Brushed Steel Finish
33''L x 3''W x 6''H x 8''-52''OAH
3 x 5.3 W GU-10 Replaceable LED (Included)
1140 Nominal Lumens
3000K, 83 CRI, 120v
Dimmable
Dry Location
ETL (US/Canada) Listed
Title 20
Sloped Ceiling Adapter Included
10 Feet of Cord Included
6, 16, and 22-inch Down Rods Included
Optional 6, 16, and 22-inch Down Rods Available

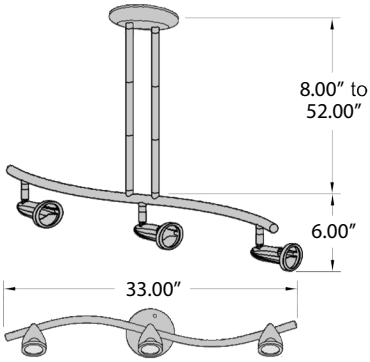

MIRAGE

52224LEDDLP-BRZ

4 Light Adjustable LED Pendant or Semi-Flush

Bronze Finish
40''L x 4.75''W x 6''H x 8''-52''OAH
4 x 5.3 W GU-10 Replaceable LED (Included)
1520 Nominal Lumens
3000K, 83 CRI, 120v
Dimmable
Dry Location
ETL (US/Canada) Listed
Title 20
Sloped Ceiling Adapter Included
10 Feet of Cord Included
6, 16, and 22-inch Down Rods Included
Optional 6, 16, and 22-inch Down Rods Available

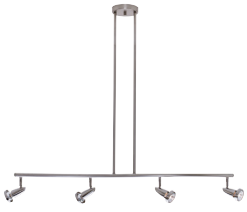

52224LEDDLP-BS
Brushed Steel Finish

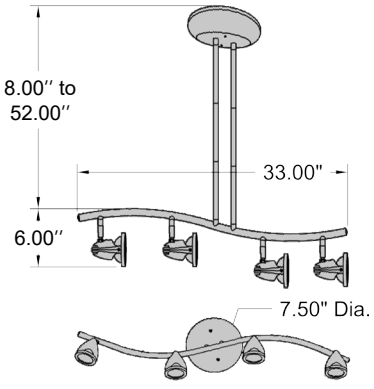

52226LEDDLP-BRZ

6 Light Adjustable LED Track

Bronze Finish
49''L x 3''W x 5''H
6 x 5.3 W GU-10 Replaceable LED (Included)
2280 Nominal Lumens
3000K, 83 CRI, 120v
Dimmable
Dry Location
ETL (US/Canada) Listed
Title 20

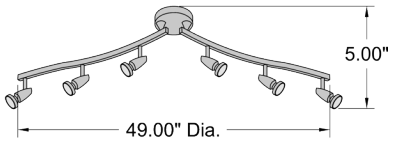

52226LEDDLP-BS
Brushed Steel Finish

PORT NINE

WALL SCONCE

SQUARED

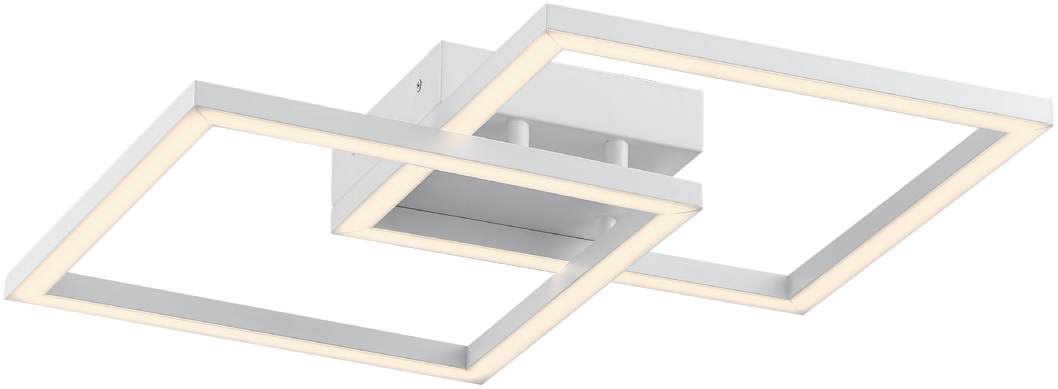

63966LEDD-BL/ACR
Black Finish

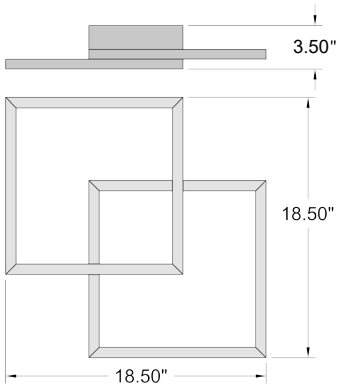

63966LEDD-WH/ACR
LED Flush Mount or Wall Sconce
White Finish
Acrylic Lens
18.5''L x 18.5''W x 3.5''H
1 x 30 W SSL Dedicated LED (Included)
2400 Nominal Lumens
3000K, 85 CRI, 120v
Dimmable
Damp Location
UL (US/Canada) Listed
ADA

SQUARED

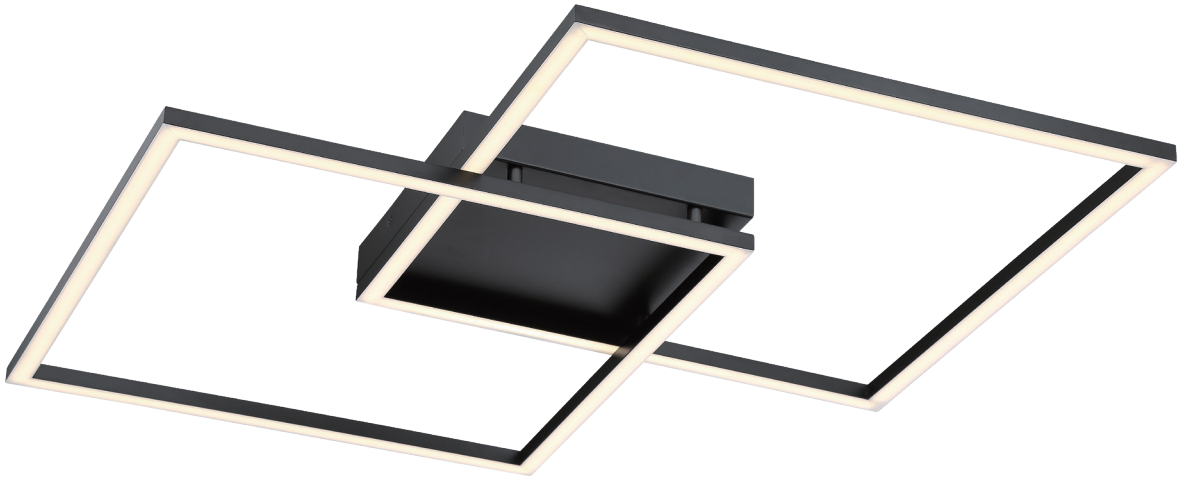

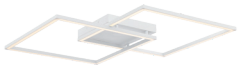

63967LEDD-WH/ACR
White Finish

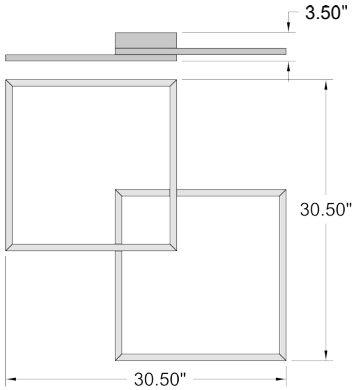

63967LEDD-BL/ACR
LED Flush Mount or Wall Sconce
Black Finish
Acrylic Lens
30.5''L x 30.5''W x 3.5''H
1 x 40 W SSL Dedicated LED (Included)
3200 Nominal Lumens
3000K, 85 CRI, 120v
Dimmable
Damp Location
UL (US/Canada) Listed
ADA

CHANEL THE VOCABULARY OF STYLE
THE LITTLE DICTIONARY OF FASHION · CHRISTIAN DIOR

72010LEDDLP-ABB
Antique Brushed Brass Finish

72010LEDDLP-MBL
Matte Black Finish

72010LEDDLP-MWH
Matte White Finish

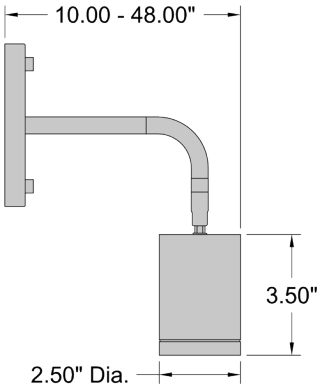

72010LEDDLP-ABB

1 Light Wall or Ceiling LED Spotlight
Antique Brushed Brass Finish
Steel Shade
2.5''DIA. x 7.75''H x 10''-48''OAH
1 x 5.5 W GU-10 Replaceable LED (Included)
500 Nominal Lumens
3000K, 90 CRI, 120v
Dimmable
Damp Location
UL (US/Canada) Listed
JA8-2016/Title 24 Listed
Sloped Ceiling Adapter Included
10 Feet of Cord Included
6, 16, and 22-inch Down Rods Included
Optional 6, 16, and 22-inch Down Rods Available

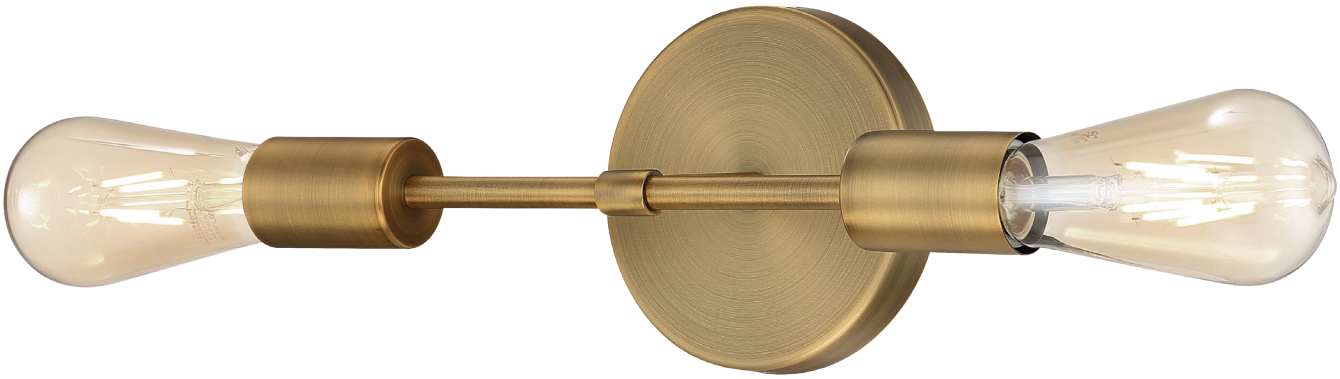

62300LEDDLP-ABB

2 Light LED Wall Sconce

Antique Brushed Brass Finish
5''W x 12''H x 4.5''Ext.
2 x 7 W E-26 Replaceable LED (Included)
1200 Nominal Lumens
2700K, 90 CRI, 120v
Dimmable
Damp Location
UL (US/Canada) Listed
JA8-2016/Title 24 Listed
Horizontal or Vertical Mounting

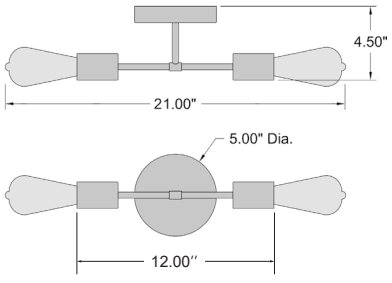

62300LEDDLP-MBL
Matte Black Finish

PORT NINE

63143LEDD-ABB/CLR
Antique Brushed Brass Finish

63143LEDD-MBL/CLR
Matte Black Finish

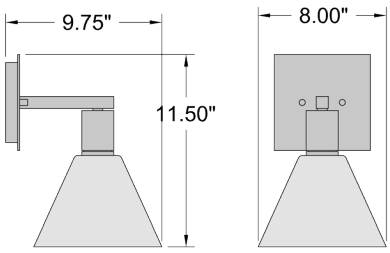

63143LEDD-BS/CLR
Martini LED Wall Sconce
Brushed Steel Finish
Clear Glass
8''W x 11.5''H x 9.75''Ext.
1 x 9 W SSL Dedicated LED (Included)
506 Delivered Lumens
3000K, 90 CRI, 120v
Dimmable
Damp Location
ETL (US/Canada) Listed
JA8-2016/Title 24 Listed
Can be Mounted Bulb Up or Bulb Down

63143LEDD-MBL/SDG

Martini LED Wall Sconce

Matte Black Finish
Seeded Glass
8''W x 11.5''H x 9.75''Ext.
1 x 9 W SSL Dedicated LED (Included)
506 Delivered Lumens
3000K, 90 CRI, 120v
Dimmable
Damp Location
ETL (US/Canada) Listed
JA8-2016/Title 24 Listed
Can be Mounted Bulb Up or Bulb Down

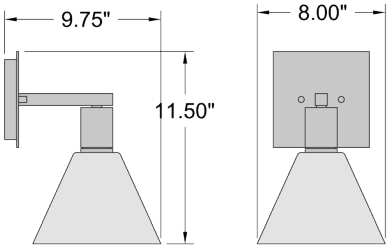

63143LEDD-ABB/SDG
Antique Brushed Brass Finish

63143LEDD-BS/SDG
Brushed Steel Finish

63144LEDD-ABB/CLR
Antique Brushed Brass Finish

63144LEDD-BS/CLR
Brushed Steel Finish

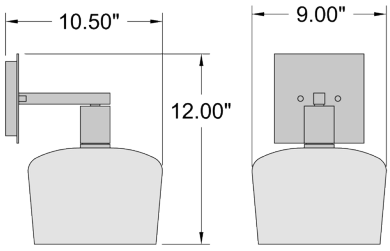

63144LEDD-MBL/CLR
Chardonnay LED Wall Sconce
Matte Black Finish
Clear Glass
9''W x 12''H x 10.5''Ext.
1 x 9 W SSL Dedicated LED (Included)
506 Delivered Lumens
3000K, 90 CRI, 120v
Dimmable
Damp Location
ETL (US/Canada) Listed
JA8-2016/Title 24 Listed
Can be Mounted Bulb Up or Bulb Down

63144LEDD-BS/SDG
Brushed Steel Finish

63144LEDD-MBL/SDG
Matte Black Finish

63144LEDD-ABB/SDG

Chardonnay LED Wall Sconce
Antique Brushed Brass Finish
Seeded Glass
9''W x 12''H x 10.5''Ext.
1 x 9 W SSL Dedicated LED (Included)
506 Delivered Lumens
3000K, 90 CRI, 120v
Dimmable
Damp Location
ETL (US/Canada) Listed
JA8-2016/Title 24 Listed
Can be Mounted Bulb Up or Bulb Down

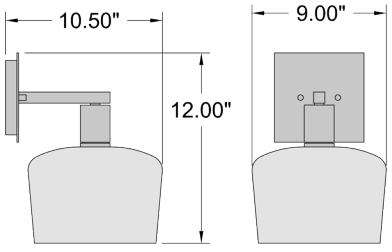

63145LEDD-ABB/CLR
Antique Brushed Brass Finish

63145LEDD-MBL/CLR
Matte Black Finish

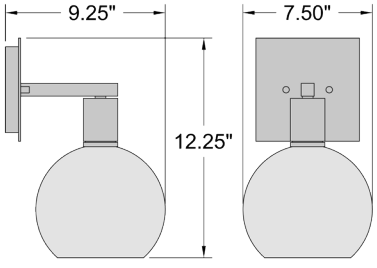

63145LEDD-BS/CLR
Burgundy LED Wall Sconce
Brushed Steel Finish
Clear Glass
7.5''W x 12.25''H x 9.25''Ext.
1 x 9 W SSL Dedicated LED (Included)
506 Delivered Lumens
3000K, 90 CRI, 120v
Dimmable
Damp Location
ETL (US/Canada) Listed
JA8-2016/Title 24 Listed
Can be Mounted Bulb Up or Bulb Down

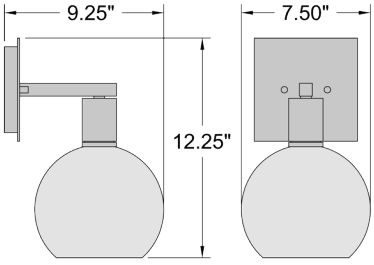

63145LEDD-ABB/SDG

Burgundy LED Wall Sconce

Antique Brushed Brass Finish
Seeded Glass
7.5''W x 12.25''H x 9.25''Ext.
1 x 9 W SSL Dedicated LED (Included)
506 Delivered Lumens
3000K, 90 CRI, 120v
Dimmable
Damp Location
ETL (US/Canada) Listed
JA8-2016/Title 24 Listed
Can be Mounted Bulb Up or Bulb Down

63145LEDD-BS/SDG
Brushed Steel Finish

63145LEDD-MBL/SDG
Matte Black Finish

BOULDER

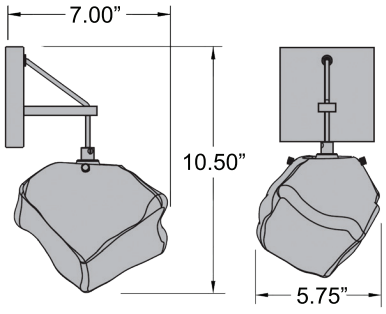

63129LEDDLP-MSS/CLR

1 Light LED Wall Sconce & Vanity

Mirrored Stainless Steel Finish
Clear Glass
5.75’’W x 10.5’’H x 7’’Ext.
1 x 4.5 W G9 Replaceable LED (Included)
450 Nominal Lumens
3000K, 80 CRI, 120v
Dimmable
Damp Location
UL (US/Canada) Listed
Title 20

MID TOWN

64061LEDDLP-BS/WH
Brushed Steel Finish

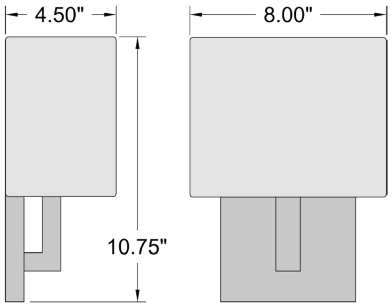

64061LEDDLP-ABB/WH
1 Light LED Wall Sconce
Antique Brushed Brass Finish
Fabric Shade
8''W x 10.75''H x 4.5''Ext.
1 x 10 W E-26 Replaceable LED (Included)
800 Nominal Lumens
3000K, 90 CRI, 120v
Dimmable
Dry Location
UL (US/Canada) Listed
JA8-2016/Title 24 Listed, Title 20

MID TOWN

64062LEDDLP-ABB/WH
Antique Brushed Brass Finish

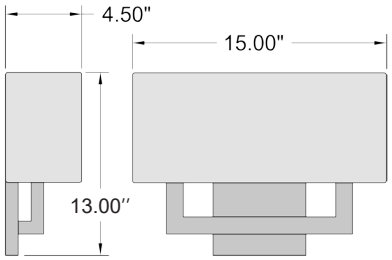

64062LEDDLP-BS/WH
2 Light LED Wall Sconce
Brushed Steel Finish
Fabric Shade
15''W x 13''H x 4.5''Ext.
2 x 10 W E-26 Replaceable LED (Included)
1600 Nominal Lumens
3000K, 90 CRI, 120v
Dimmable
Dry Location
UL (US/Canada) Listed
JA8-2016/Title 24 Listed, Title 20

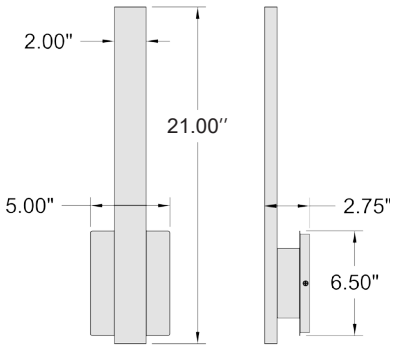

62160LEDD-MBL/ACR
Matte Black Finish

62160LEDD-WH/ACR
LED Wall Sconce
White Finish
Acrylic Lens
5''W x 21''H x 3''Ext.
1 x 10 W SSL Dedicated LED (Included)
387 Delivered Lumens
3000K, 90 CRI, 120v
Dimmable
Damp Location
ETL (US/Canada) Listed
ADA, JA8-2016/Title 24 Listed
Multi-Directional Mounting

BOW

62246LEDD-CH/ACR

LED Wall Sconce & Vanity

Chrome Finish
Acrylic Lens
10.75''W x 5''H x 4''Ext.
1 x 10 W SSL Dedicated LED (Included)
578 Delivered Lumens
3000K, 85 CRI, 120v
Dimmable
Damp Location
ETL (US/Canada) Listed
ADA
Multi-Directional Mounting

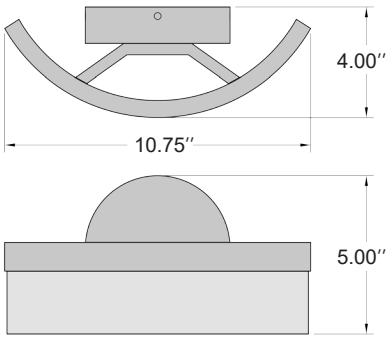

62246LEDD-BRZ/ACR
Bronze Finish

NUMERO

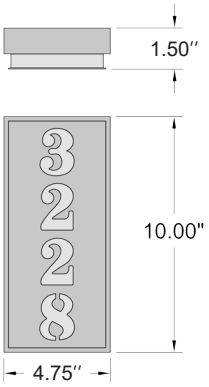

SB-20020LED-BL/ACR

Indoor LED Address Light

Black Finish
Acrylic Lens
4.75''W x 10''H x 1.5''Ext.
1 x 4 W SSL Dedicated LED (Included)
400 Nominal Lumens
3000K, 90 CRI, 120v
Dry Location
ETL (US/Canada) Listed
ADA
Horizontal or Vertical Mounting
100pcs. Minimum Order Quantity

MADRID

MADRID

52181LEDD-MBL/ACR

2 Light LED Wall Sconce

Matte Black Finish
Acrylic Lens
12.25''W x 10.25''H x 3.25''Ext.
2 x 5 W SSL Dedicated LED (Included)
1000 Nominal Lumens
3000K, 90 CRI, 120v
Dimmable
Damp Location
UL (US/Canada) Listed
ADA
Up Light on Left Side, Down Light on Right Side

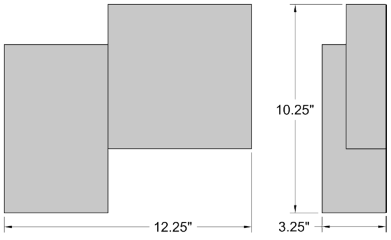

52181LEDD-MWH/ACR
Matte White Finish

LUX

20408LEDD-SAT
Satin Finish

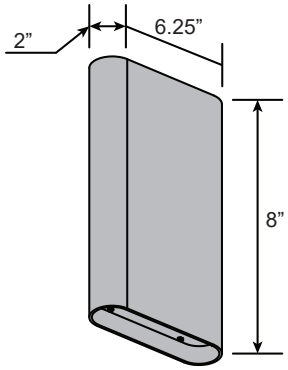

20408LEDD-BL
Dual Voltage 2 Light LED Wall Sconce
Black Finish
6.25’’W x 8’’H x 2’’Ext.
2 x 6 W SSL Dedicated LED (Included)
670 Delivered Lumens
3000K, 85 CRI, 120-277v
Dimmable
Damp Location
UL (US/Canada) Listed
ADA

LUX

20409LEDD-BL
Black Finish

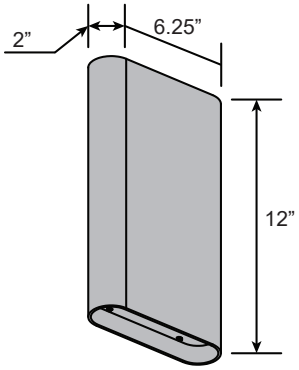

20409LEDD-SAT
Dual Voltage 2 Light LED Wall Sconce
Satin Finish
6.25’’W x 12’’H x 2’’Ext.
2 x 6 W SSL Dedicated LED (Included)
663 Delivered Lumens
3000K, 85 CRI, 120-277v
Dimmable
Damp Location
UL (US/Canada) Listed
ADA

PUNCH

62237LEDD-WH

1 Light LED Wall Sconce

White Finish
8.25''W x 12''H x 3''Ext.
1 x 7 W SSL Dedicated LED (Included)
401 Delivered Lumens
3000K, 90 CRI, 120v
Dimmable
Dry Location
UL (US/Canada) Listed
ADA, JA8-2016/Title 24 Listed

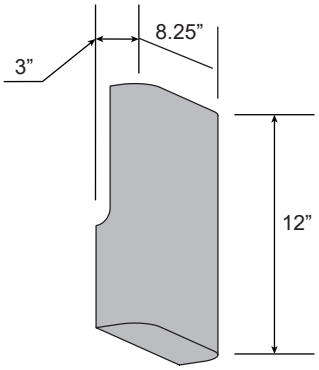

62237LEDD-BL
Black Finish

BI-PUNCH

62238LEDD-WH

2 Light LED Wall Sconce

White Finish
8.25''W x 18.25''H x 3''Ext.
2 x 7 W SSL Dedicated LED (Included)
782 Delivered Lumens
3000K, 90 CRI, 120v
Dimmable
Dry Location
UL (US/Canada) Listed
ADA, JA8-2016/Title 24 Listed

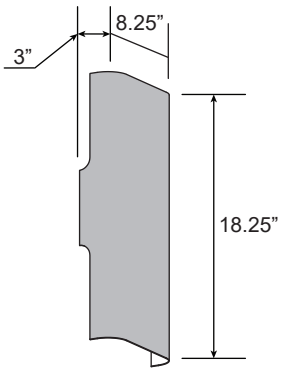

62238LEDD-BL
Black Finish

IRON

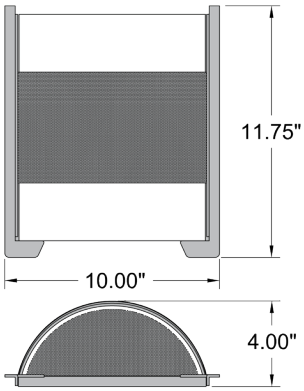

20739-BRZ/OPL
Bronze Finish

20739-BS/OPL
2 Light LED Wall Sconce
Brushed Steel Finish
Opal Glass
10''W x 11.75''H x 4''Ext.
2 x 60 W E-26 Incandescent
120v
Dimmable
Damp Location
UL (US/Canada) Listed
ADA

20739LEDDLP-BS/OPL

2 Light LED Wall Sconce

Brushed Steel Finish
Opal Glass
10''W x 11.75''H x 4''Ext.
2 x 10 W E-26 Replaceable LED (Included)
1600 Nominal Lumens
3000K, 90 CRI, 120v
Dimmable
Damp Location
UL (US/Canada) Listed
ADA, JA8-2016/Title 24 Listed, Title 20

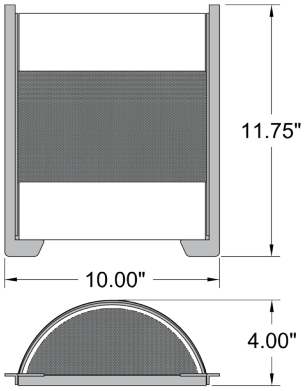

20739LEDDLP-BRZ/OPL
Bronze Finish

IRON

20739LEDD-BRZ/OPL

LED Wall Sconce

Bronze Finish
Opal Glass
10''W x 11.75''H x 4''Ext.
1 x 16 W SSL Dedicated LED (Included)
452 Delivered Lumens
3000K, 90 CRI, 120v
Dimmable
Damp Location
UL (US/Canada) Listed
ADA, Energy Star

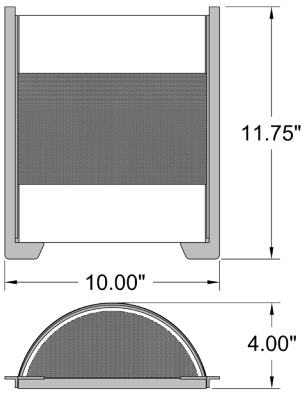

20739LEDD-BS/OPL
Brushed Steel Finish

METRO

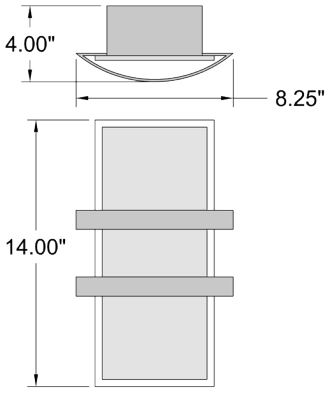

62218LEDD-BS/OPL

LED Wall Sconce

Brushed Steel Finish
Opal Glass
8.25''W x 14''H x 4''Ext.
1 x 14 W SSL Dedicated LED (Included)
1230 Nominal Lumens
3000K, 90 CRI, 120v
Dimmable
Damp Location
UL (US/Canada) Listed
ADA, JA8-2016/Title 24 Listed

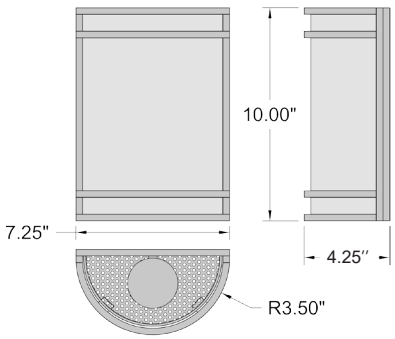

62165-BS/FST

1 Light Wall Sconce

Brushed Steel Finish
Frosted Glass
7.25''W x 10''H x 4.25''Ext.
1 x 60 W E-26 Incandescent
120V
Dimmable
Damp Location
UL (US/Canada) Listed

62165-BRZ/FST
Bronze Finish

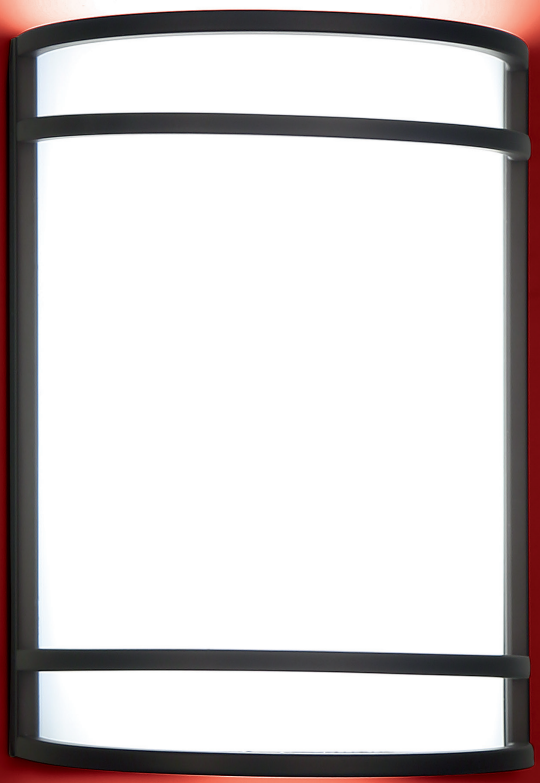

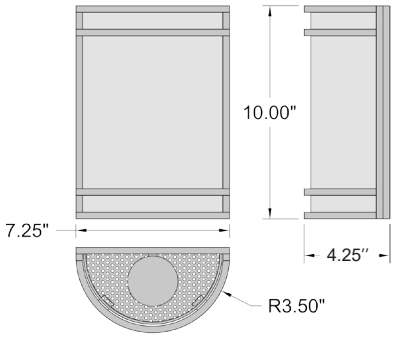

62165LEDDLP-BRZ/FST

1 Light LED Wall Sconce

Bronze Finish
Frosted Glass
7.25''W x 10''H x 4.25''Ext.
1 x 10 W E-26 Replaceable LED (Included)
800 Nominal Lumens
3000K, 90 CRI, 120v
Dimmable
Damp Location
ETL (US/Canada) Listed
JA8-2016/Title 24 Listed

62165LEDDLP-BS/FST
Brushed Steel Finish

ARTEMIS

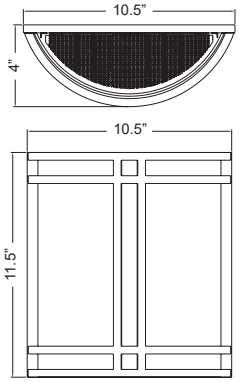

20420-SAT/OPL
2 Light Wall Sconce
Satin Finish
Opal Glass
10.5''W x 11.5''H x 4''Ext.
2 x 60 W E-26 Incandescent
120v
Dimmable
Dry Location
UL (US/Canada) Listed
ADA

ARTEMIS

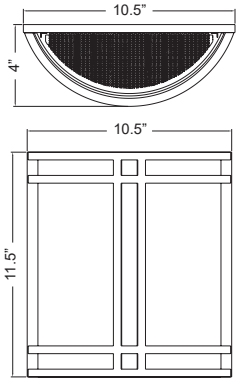

20420LEDDLP-SAT/OPL
2 Light LED Wall Sconce
Satin Finish
Opal Glass
10.5''W x 11.5''H x 4''Ext.
2 x 10 W E-26 Replaceable LED (Included)
1600 Nominal Lumens
3000K, 90 CRI, 120v
Dimmable
Dry Location
UL (US/Canada) Listed
ADA, JA8-2016/Title 24 Listed, Title 20

20420LEDD-SAT/OPL

LED Wall Sconce

Satin Finish
Opal Glass
10.5''W x 11.5''H x 4''Ext.
1 x 16 W SSL Dedicated LED (Included)
720 Delivered Lumens
3000K, 90 CRI, 120v
Dimmable
Damp Location
UL (US/Canada) Listed
ADA, Energy Star

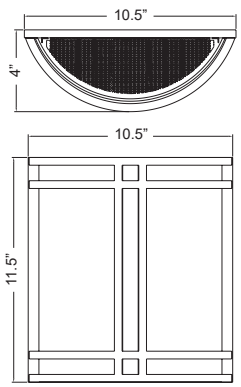

ARTEMIS

20416-BS/OPL

2 Light Wall Sconce

Brushed Steel Finish
Opal Glass
7.5''W x 12.25''H x 4''Ext.
2 x 60 W E-26 Incandescent
120v
Dimmable
Dry Location
UL (US/Canada) Listed
ADA

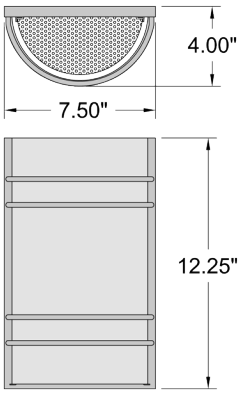

20416-MBL/OPL

Matte Black Finish

ARTEMIS

20416LEDDLP-BS/OPL
Brushed Steel Finish

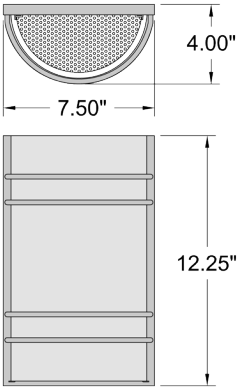

20416LEDDLP-MBL/OPL

2 Light LED Wall Sconce
Matte Black Finish
Opal Glass
7.5''W x 12.25''H x 4''Ext.
2 x 10 W E-26 Replaceable LED (Included)
1600 Nominal Lumens
3000K, 90 CRI, 120v
Dimmable
Dry Location
UL (US/Canada) Listed
ADA, JA8-2016/Title 24 Listed, Title 20

ARTEMIS

20416LEDD-MBL/OPL
Brushed Steel Finish

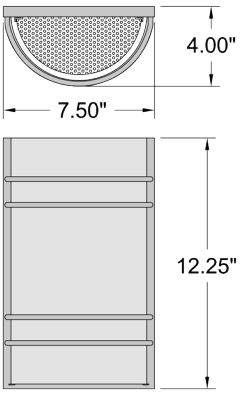

20416LEDD-BS/OPL

LED Wall Sconce
Brushed Steel Finish
Opal Glass
7.5''W x 12.25''H x 4''Ext.
1 x 16 W SSL Dedicated LED (Included)
1650 Nominal Lumens
3000K, 90 CRI, 120v
Dimmable
Damp Location
UL (US/Canada) Listed
ADA, Energy Star

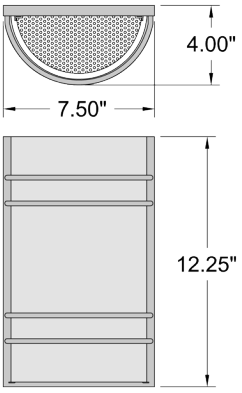

20416LEDDLP-MBL/SDG

1 Light LED Wall Sconce

Matte Black Finish
Seeded Glass
7.5''W x 12.25''H x 4''Ext.
1 x 4 W E-26 Replaceable LED (Included)
300 Nominal Lumens
2700K, 90 CRI, 120v
Dimmable
Dry Location
UL (US/Canada) Listed
ADA, JA8-2016/Title 24 Listed, Title 20

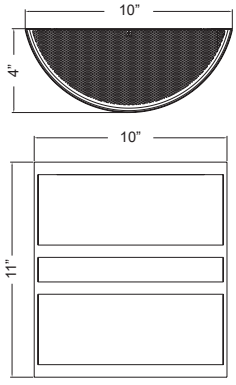

20440-BRZ/OPL
Bronze Finish

20440-BS/OPL
2 Light Wall Sconce
Brushed Steel Finish
Opal Glass
10''W x 11''H x 4''Ext.
2 x 60 W E-26 Incandescent
120v
Dimmable
Damp Location
UL (US/Canada) Listed
ADA

20440LEDDLP-BS/OPL

2 Light LED Wall Sconce

Brushed Steel Finish
Opal Glass
10''W x 11''H x 4''Ext.
2 x 10 W E-26 Replaceable LED (Included)
1600 Nominal Lumens
3000K, 90 CRI, 120v
Dimmable
Damp Location
UL (US/Canada) Listed
ADA, JA8-2016/Title 24 Listed, Title 20

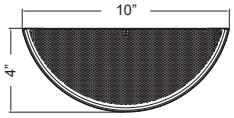

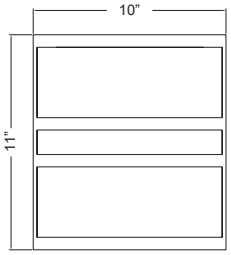

20440LEDDLP-BRZ/OPL
Bronze Finish

ARTEMIS

20440LEDD-BRZ/OPL

LED Wall Sconce

Bronze Finish
Opal Glass
10''W x 11''H x 4''Ext.
1 x 16 W SSL Dedicated LED (Included)
757 Delivered Lumens
3000K, 90 CRI, 120v
Dimmable
Damp Location
UL (US/Canada) Listed
ADA, Energy Star

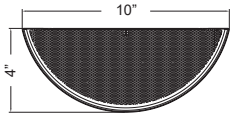

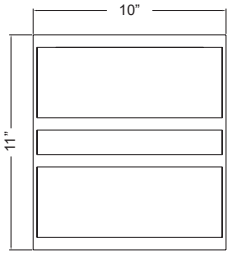

20440LEDD-BS/OPL
Brushed Steel Finish

ARTEMIS

20439-BRZ/OPL
Bronze Finish

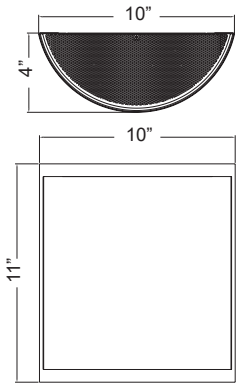

20439-BS/OPL

2 Light Wall Sconce
Brushed Steel Finish
Opal Glass
10’’W x 11’’H x 4’’Ext.
2 x 60 W E-26 Incandescent
120v
Dimmable
Damp Location
UL (US/Canada) Listed
ADA

ARTEMIS

20439LEDDLP-BS/OPL
Brushed Steel Finish

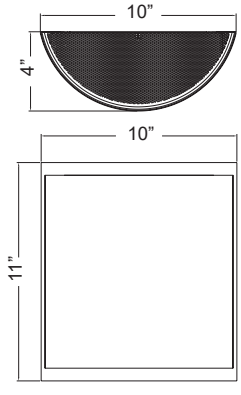

20439LEDDLP-BRZ/OPL

2 Light LED Wall Sconce
Bronze Finish
Opal Glass
10’’W x 11’’H x 4’’Ext.
2 x 10 W E-26 Replaceable LED (Included)
1600 Nominal Lumens
3000K, 90 CRI, 120v
Dimmable
Damp Location
UL (US/Canada) Listed
ADA, JA8-2016/Title 24 Listed, Title 20

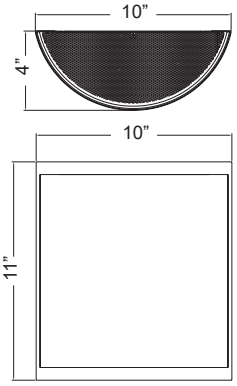

20439LEDD-BS/OPL

LED Wall Sconce

Brushed Steel Finish
Opal Glass
10’’W x 11’’H x 4’’Ext.
1 x 16 W SSL Dedicated LED (Included)
908 Delivered Lumens
3000K, 90 CRI, 120v
Dimmable
Damp Location
UL (US/Canada) Listed
ADA, Energy Star

20439LEDD-BRZ/OPL
Bronze Finish

PRONG

20447-BS/WHT

2 Light Wall Sconce

Brushed Steel Finish
White Glass
12''W x 7.5''H x 4''Ext.
2 x 60 W E-26 Incandescent
120v
Dimmable
Damp Location
UL (US/Canada) Listed
ADA

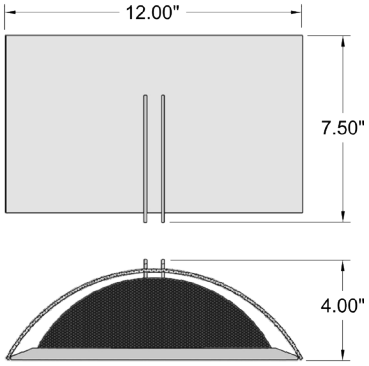

20447-MBL/WH
Matte Black Finish

PRONG

20447LEDDLP-MBL/WH

2 Light LED Wall Sconce

Matte Black Finish
White Glass
12''W x 7.5''H x 4''Ext.
2 x 10 W E-26 Replaceable LED (Included)
1600 Nominal Lumens
3000K, 90 CRI, 120v
Dimmable
Damp Location
ETL (US/Canada) Listed
ADA, JA8-2016/Title 24 Listed, Title 20

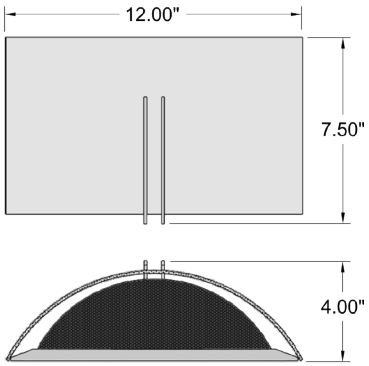

20447LEDDLP-BS/WHT
Brushed Steel Finish

PRONG

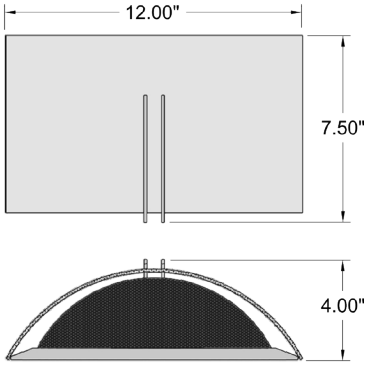

20447LEDD-BS/WHT
LED Wall Sconce
Brushed Steel Finish
White Glass
12''W x 7.5''H x 4''Ext.
1 x 16 W SSL Dedicated LED (Included)
693 Delivered Lumens
3000K, 90 CRI, 120v
Dimmable
Damp Location
UL (US/Canada) Listed
ADA, Energy Star

20447-MBL/WH
Matte Black Finish

PRONG

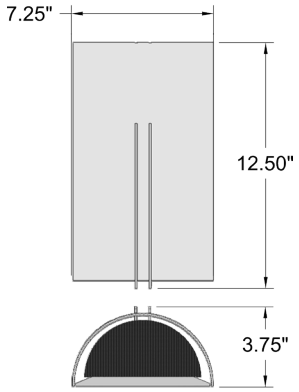

20446-BS/WHT
2 Light Wall Sconce
Brushed Steel Finish
White Glass
7.25''W x 12.5''H x 3.75''Ext.
2 x 60 W E-26 Incandescent
120v
Dimmable
Damp Location
UL (US/Canada) Listed
ADA

20446-MBL/WH
Matte Black Finish

20446LEDDLP-MBL/WH

2 Light LED Wall Sconce

Matte Black Finish
White Glass
7.25''W x 12.5''H x 3.75''Ext.
2 x 10 W E-26 Replaceable LED (Included)
1600 Nominal Lumens
3000K, 90 CRI, 120v
Dimmable
Damp Location
ETL (US/Canada) Listed
ADA, JA8-2016/Title 24 Listed, Title 20

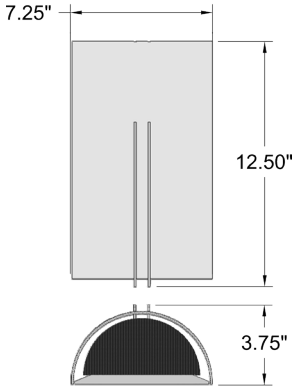

20446LEDDLP-BS/WHT
Brushed Steel Finish

PRONG

20446LEDD-MBL/WHT

LED Wall Sconce

Matte Black Finish
White Glass
7.25''W x 12.5''H x 3.75''Ext.
1 x 16 W SSL Dedicated LED (Included)
840 Delivered Lumens
3000K, 90 CRI, 120v
Dimmable
Damp Location
UL (US/Canada) Listed
ADA, Energy Star

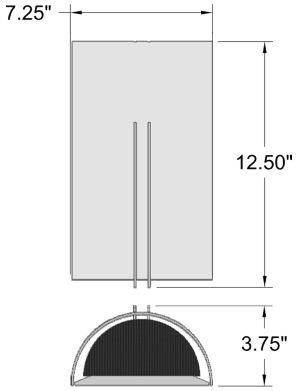

20446LEDD-BS/WHT
Brushed Steel Finish

CREST

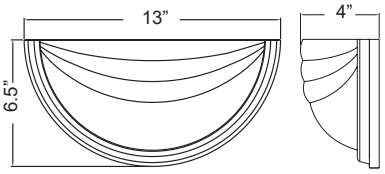

20635-SAT/ALB
2 Light Wall Sconce
Satin Finish
Alabaster Glass
13’’W x 6.5’’H x 4’’Ext.
2 x 60 W E-26 Incandescent
120v
Dimmable
Dry Location
UL (US/Canada) Listed
ADA

20635-ORB/ALB
Oil Rubbed Bronze Finish

CREST

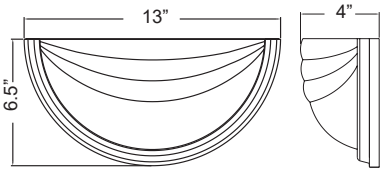

20635LEDDLP-ORB/ALB
2 Light LED Wall Sconce
Oil Rubbed Bronze Finish
Alabaster Glass
13’’W x 6.5’’H x 4’’Ext.
2 x 10 W E-26 Replaceable LED (Included)
1600 Nominal Lumens
3000K, 90 CRI, 120v
Dimmable
Dry Location
UL (US/Canada) Listed
ADA, JA8-2016/Title 24 Listed, Title 20

20635LEDDLP-SAT/ALB
Satin Finish

20635LEDD-ORB/ALB

LED Wall Sconce

Oil Rubbed Bronze Finish
Alabaster Glass
13''W x 6.5''H x 4''Ext.
1 x 13 W SSL Dedicated LED (Included)
1265 Nominal Lumens
3000K, 90 CRI, 120v
Dimmable
Dry Location
UL (US/Canada) Listed
ADA, Energy Star

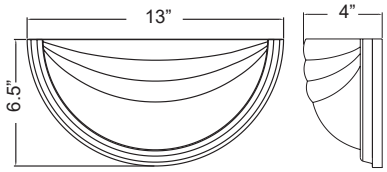

20635LEDD-SAT/ALB
Satin Finish

ZENON

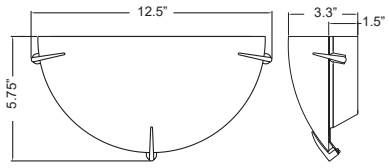

20660-BS/OPL
1 Light Wall Sconce
Brushed Steel Finish
Opal Glass
12.5''W x 5.75''H x 3.5''Ext.
1 x 60 W E-26 Incandescent
120v
Dimmable
Damp Location
UL (US/Canada) Listed
ADA

ZENON

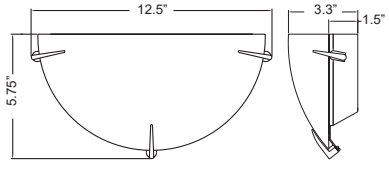

20660LEDDLP-BS/OPL
1 Light LED Wall Sconce
Brushed Steel Finish
Opal Glass
12.5''W x 5.75''H x 3.5''Ext.
1 x 10 W E-26 Replaceable LED (Included)
800 Nominal Lumens
3000K, 90 CRI, 120v
Dimmable
Damp Location
UL (US/Canada) Listed
ADA, JA8-2016/Title 24 Listed, Title 20

MONA

20417-BS/ALB

1 Light Wall Sconce

Brushed Steel Finish
Alabaster Glass
12''W x 6''H x 4.25''Ext.
1 x 60 W E-26 Incandescent
120v
Dimmable
Dry Location
UL (US/Canada) Listed

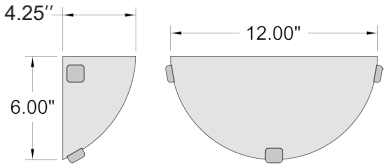

20417-ORB/ALB
Oil Rubbed Bronze Finish

MONA

20417LEDDLP-BS/ALB

1 Light LED Wall Sconce

Brushed Steel Finish
Alabaster Glass
12''W x 6''H x 4.25''Ext.
1 x 10 W E-26 Replaceable LED (Included)
800 Nominal Lumens
3000K, 90 CRI, 120v
Dimmable
Dry Location
UL (US/Canada) Listed
JA8-2016/Title 24 Listed, Title 20

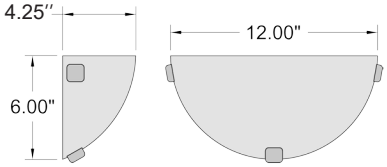

20417LEDDLP-ORB/ALB
Oil Rubbed Bronze Finish

DAPHNE

20415-OPL
Opal Glass

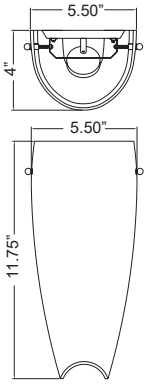

20415-ALB
1 Light Wall Sconce
Alabaster Glass
5.5''W x 11.75''H x 4''Ext.
1 x 100 W E-26 Incandescent
Nominal Lumens
120v
Dimmable
Damp Location
UL (US/Canada) Listed
ADA

DAPHNE

20415LEDD-ALB
Alabaster Glass

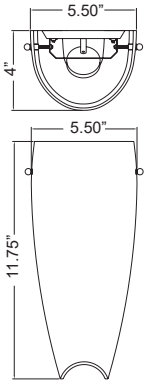

20415LEDD-OPL
LED Wall Sconce
Opal Glass Finish
5.5''W x 11.75''H x 4''Ext.
1 x 10.8 W SSL Replaceable LED (Included)
1265 Nominal Lumens
3000K, 90 CRI, 120v
Dimmable
Damp Location
UL (US/Canada) Listed
ADA

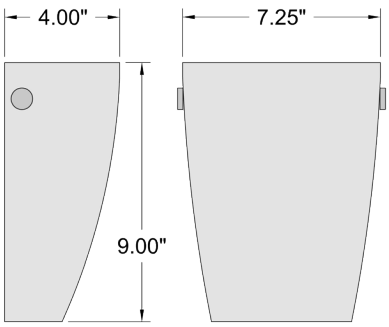

20419LEDDLP-BS/OPL

1 Light LED Wall Sconce

Brushed Steel Finish
Opal Glass
7.25''W x 9''H x 4''Ext.
1 x 10 W E-26 Replaceable LED (Included)
800 Nominal Lumens
3000K, 90 CRI, 120v
Dimmable
Damp Location
UL (US/Canada) Listed
ADA, JA8-2016/Title 24 Listed, Title 20

NITRO2

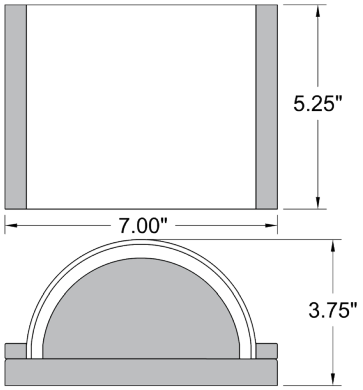

62291LEDD-BRZ/OPL
Bronze Finish

62291LEDD-BS/OPL
LED Wall Sconce or Vanity
Brushed Steel Finish
Opal Glass
7''W x 5.25''H x 3.75''Ext.
1 x 9 W SSL Dedicated LED (Included)
800 Nominal Lumens
3000K, 90 CRI, 120v
Dimmable
Damp Location
UL (US/Canada) Listed
ADA, JA8-2016/Title 24 Listed

20445-BS/OPL

2 Light Wall Sconce

Brushed Steel Finish
Opal Glass
10.25''W x 11.5''H x 4''Ext.
2 x 60 W E-26 Incandescent
120v
Dimmable
Damp Location
UL (US/Canada) Listed
ADA

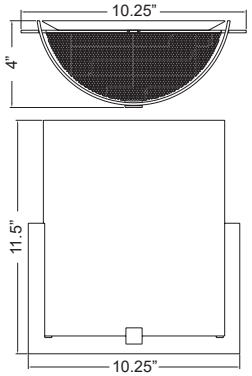

COBALT

20445LEDDLP-BS/OPL

2 Light LED Wall Sconce

Brushed Steel Finish
Opal Glass
10.25''W x 11.5''H x 4''Ext.
2 x 10 W E-26 Replaceable LED (Included)
1600 Nominal Lumens
3000K, 90 CRI, 120v
Dimmable
Damp Location
UL (US/Canada) Listed
ADA, Title 20

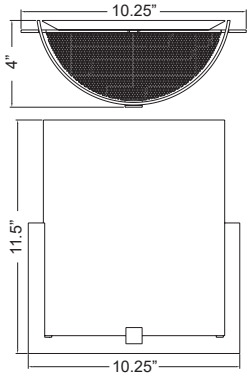

AQUEOUS

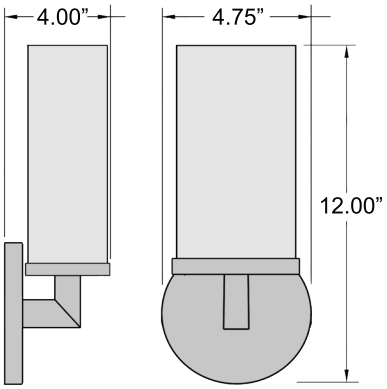

20441-BS/OPL

1 Light Wall Sconce

Brushed Steel Finish
Opal Glass
4.75’’W x 12’’H x 4’’Ext.
1 x 60 W E-26 Incandescent
120v
Dimmable
Damp Location
ETL (US/Canada) Listed
ADA

AQUEOUS

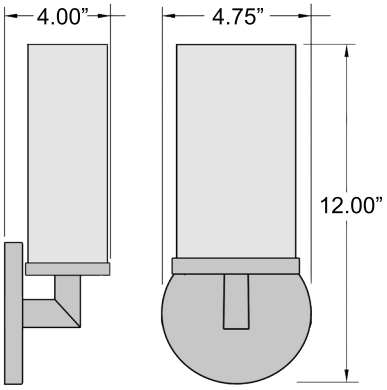

20441LEDDLP-BS/OPL

1 Light LED Wall Sconce

Brushed Steel Finish
Opal Glass
4.75’’W x 12’’H x 4’’Ext.
1 x 4 W E-26 Replaceable LED (Included)
300 Nominal Lumens
2700K, 90 CRI, 120v
Dimmable
Damp Location
ETL (US/Canada) Listed
ADA, JA8-2016/Title 24 Listed, Title 20

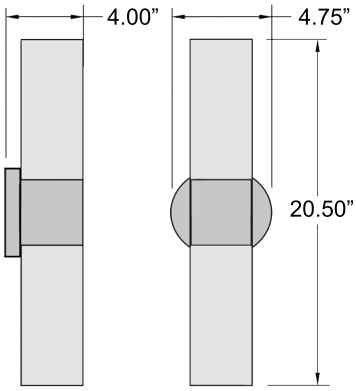

20442-BS/OPL

2 Light Wall Sconce

Brushed Steel Finish
Opal Glass
4.75’’W x 20.5’’H x 4’’Ext.
2 x 60 W E-26 Incandescent
120v
Dimmable
Damp Location
ETL (US/Canada) Listed
ADA

AQUEOUS

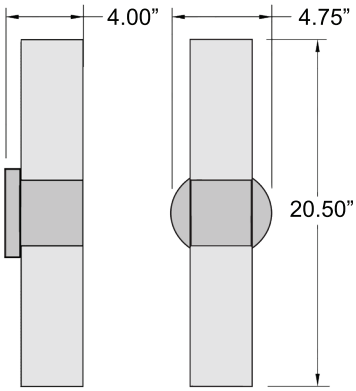

20442LEDDLP-BS/OPL

2 Light LED Wall Sconce

Brushed Steel Finish
Opal Glass
4.75’’W x 20.5’’H x 4’’Ext.
2 x 4 W E-26 Replaceable LED (Included)
600 Nominal Lumens
2700K, 90 CRI, 120v
Dimmable
Damp Location
ETL (US/Canada) Listed
ADA, JA8-2016/Title 24 Listed, Title 20

OSLO

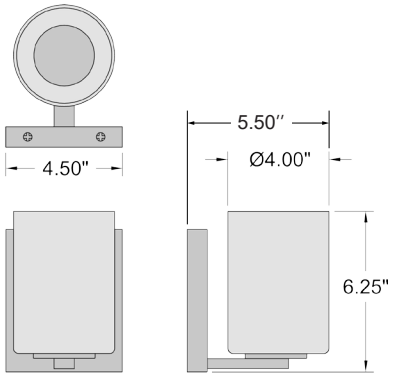

62580LEDDLP-CH/OPL

1 Light LED Wall Sconce or Vanity

Chrome Finish
Opal Glass
4.5''W x 6.25''H x 5.5''Ext.
1 x 9 W E-26 Replaceable LED (Included)
800 Nominal Lumens
3000K, 90 CRI, 120v
Dimmable
Damp Location
UL (US/Canada) Listed
JA8-2016/Title 24 Listed
Multi-Directional Mounting

IRON

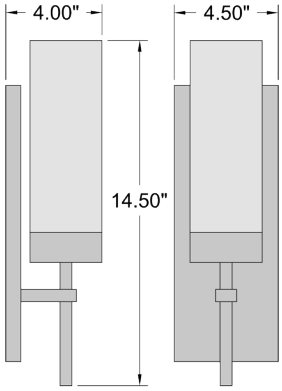

50562-BS/OPL

1 Light Wall Sconce

Brushed Steel Finish
Opal Glass
4.5''W x 14.5''H x 4''Ext.
1 x 60 W E-26 Incandescent
120v
Dimmable
Damp Location
UL (US/Canada) Listed
ADA

PERCH

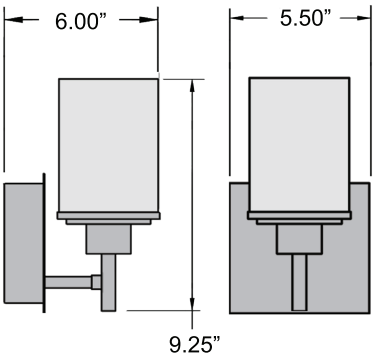

62509LEDD-BS/CSL

1 Light LED Wall Sconce & Vanity

Brushed Steel Finish
Cream Silk Lined Glass
5.5''W x 9.25''H x 6''Ext.
1 x 5 W SSL Dedicated LED (Included)
570 Nominal Lumens
3000K, 90 CRI, 120v
Dimmable
Damp Location
ETL (US/Canada) Listed

50175-BS/OPL

1 Light Wall Sconce & Vanity

Brushed Steel Finish
Opal Glass
4.75''W x 8.5''H x 5.75''Ext.
1 x 60 W E-26 Incandescent
120v
Dimmable
Damp Location
ETL (US/Canada) Listed

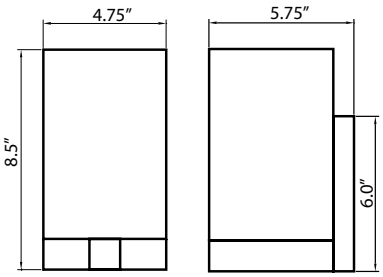

ARCHI

50175LEDDLP-BS/OPL

1 Light LED Wall Sconce & Vanity

Brushed Steel Finish
Opal Glass
4.75''W x 8.5''H x 5.75''Ext.
1 x 10 W E-26 Replaceable LED (Included)
800 Nominal Lumens
3000K, 90 CRI, 120v
Dimmable
Damp Location
ETL (US/Canada) Listed
JA8-2016/Title 24 Listed, Title 20

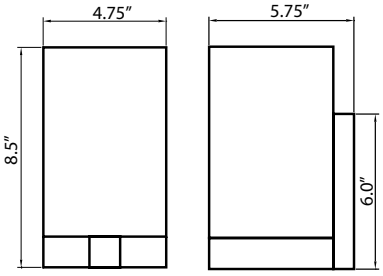

UPTOWN

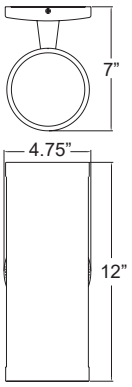

20444-BRZ

2 Light Wall Sconce

Bronze Finish

4.75’’W x 12’’H x 7’’Ext.

2 x 60 W E-26 Incandescent

120v

Dimmable

Damp Location

UL (US/Canada) Listed

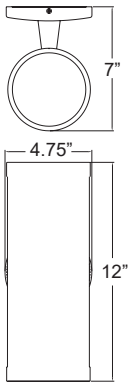

20444LEDDLP-BRZ

2 Light LED Wall Sconce

Bronze Finish
4.75’’W x 12’’H x 7’’Ext.
2 x 10 W E-26 Replaceable LED (Included)
1600 Nominal Lumens
3000K, 90 CRI, 120v
Dimmable
Damp Location
UL (US/Canada) Listed
Energy Star, JA8-2016/Title 24 Listed, Title 20

AQUA

VANITY

NETHERTON

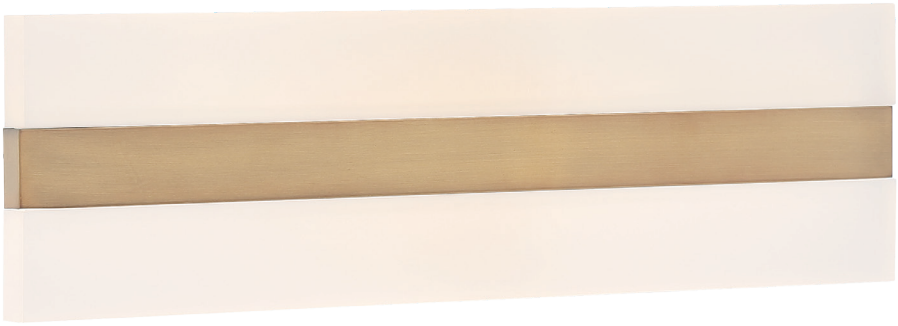

62591LEDD-BS/ACR
Brushed Steel Finish

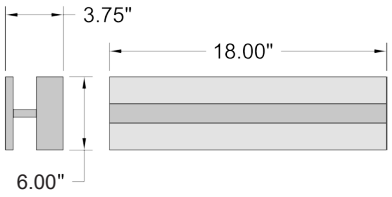

62591LEDD-MBL/ACR
Matte Black Finish

62591LEDD-ABB/ACR
Bi-Directional LED Vanity
Antique Brass Finish
Acrylic Lens
18''W x 6''H x 4''Ext.
2 x 10 W SSL Dedicated LED (Included)
1088 Delivered Lumens
3000K, 90 CRI, 120v
Dimmable
Damp Location
ETL (US/Canada) Listed
ADA, JA8-2016/Title 24 Listed
Horizontal or Vertical Mounting

62592LEDD-MBL/ACR

Bi-Directional LED Vanity
Matte Black Finish
Acrylic Lens
24''W x 6''H x 4''Ext.
2 x 11.5 W SSL Dedicated LED (Included)
1586 Delivered Lumens
3000K, 90 CRI, 120v
Dimmable
Damp Location
ETL (US/Canada) Listed
ADA, JA8-2016/Title 24 Listed
Horizontal or Vertical Mounting

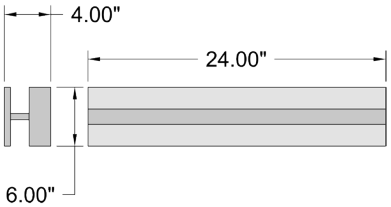

62592LEDD-ABB/ACR
Antique Brass Finish

62592LEDD-BS/ACR
Brushed Steel Finish

NETHERTON

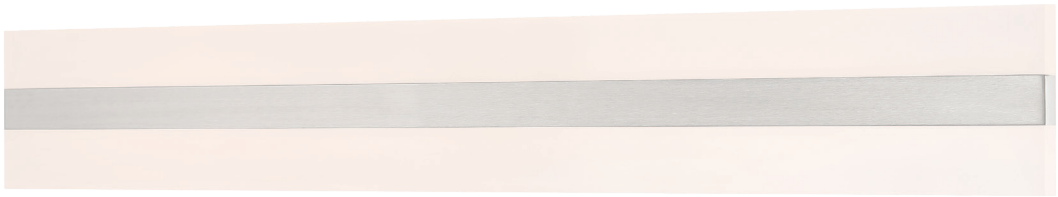

62593LEDD-BS/ACR

Bi-Directional LED Vanity
Brushed Steel Finish
Acrylic Lens
36''W x 6''H x 4''Ext.
2 x 14 W SSL Dedicated LED (Included)
1993 Delivered Lumens
3000K, 90 CRI, 120v
Dimmable
Damp Location
ETL (US/Canada) Listed
ADA, JA8-2016/Title 24 Listed
Horizontal or Vertical Mounting

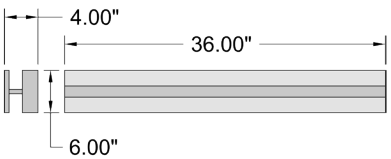

62593LEDD-ABB/ACR
Antique Brass Finish

62593LEDD-MBL/ACR
Matte Black Finish

CITI

62570LEDD-ABB/ACR
Antique Brushed Brass Finish

62570LEDD-BS/ACR
Brushed Steel Finish

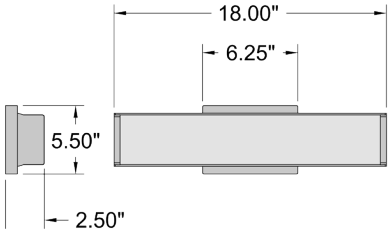

62570LEDD-MBL/ACR
LED Vanity
Matte Black Finish
Acrylic Lens
18''W x 5.5''H x 2.5''Ext.
1 x 20 W SSL Dedicated LED (Included)
1136 Delivered Lumens
3000K, 90 CRI, 120v
Dimmable
Damp Location
ETL (US/Canada) Listed
ADA, JA8-2016/Title 24 Listed
Horizontal or Vertical Mounting

CITI

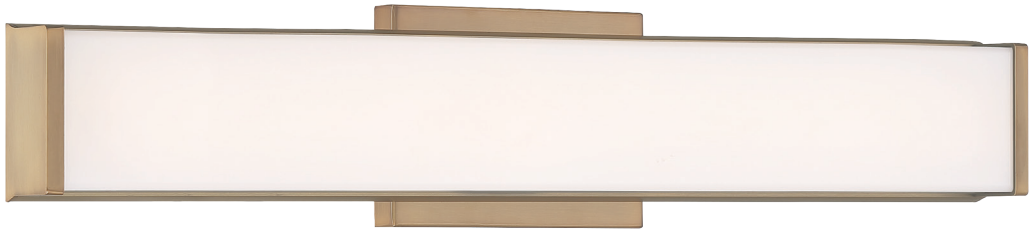

62571LEDD-BS/ACR
Brushed Steel Finish

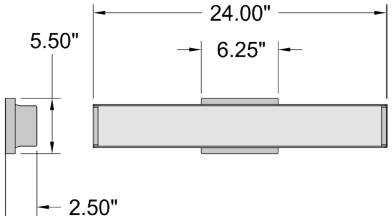

62571LEDD-MBL/ACR
Matte Black Finish

62571LEDD-ABB/ACR
LED Vanity
Antique Brushed Brass Finish
Acrylic Lens
24''W x 5.5''H x 2.5''Ext.
1 x 25 W SSL Dedicated LED (Included)
1420 Delivered Lumens
3000K, 90 CRI, 120v
Dimmable
Damp Location
ETL (US/Canada) Listed
ADA, JA8-2016/Title 24 Listed
Horizontal or Vertical Mounting

CITI

62572LEDD-ABB/ACR
Antique Brushed Brass Finish

62572LEDD-MBL/ACR
Matte Black Finish

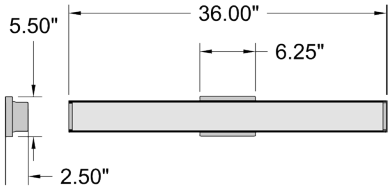

62572LEDD-BS/ACR
LED Vanity
Brushed Steel Finish
Acrylic Lens
36''W x 5.5''H x 2.5''Ext.
1 x 30 W SSL Dedicated LED (Included)
1903 Delivered Lumens
3000K, 90 CRI, 120v
Dimmable
Damp Location
ETL (US/Canada) Listed
ADA, JA8-2016/Title 24 Listed
Horizontal or Vertical Mounting

CITI

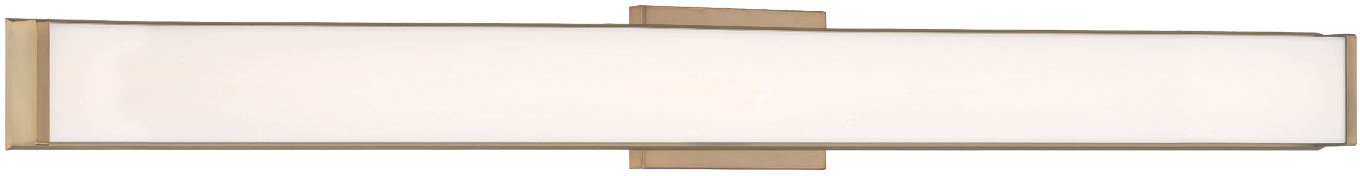

62573LEDD-BS/ACR
Brushed Steel Finish

62573LEDD-MBL/ACR
Matte Black Finish

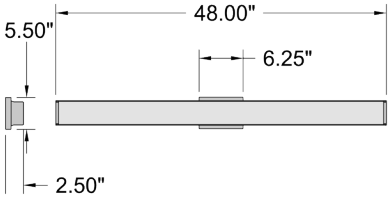

62573LEDD-ABB/ACR
LED Vanity
Antique Brushed Brass Finish
Acrylic Lens
48''W x 5.5''H x 2.5''Ext.
1 x 35 W SSL Dedicated LED (Included)
2314 Delivered Lumens
3000K, 90 CRI, 120v
Dimmable
Damp Location
ETL (US/Canada) Listed
ADA, JA8-2016/Title 24 Listed
Horizontal or Vertical Mounting

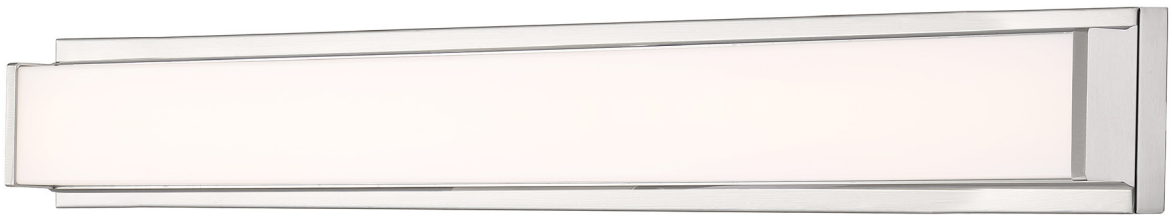

62601LEDD-BS/ACR

LED Vanity

Brushed Steel Finish
Acrylic Lens
24''W x 5.5''H x 2.5''Ext.
1 x 25 W SSL Dedicated LED (Included)
1420 Delivered Lumens
3000K, 90 CRI, 120v
Dimmable
Damp Location
ETL (US/Canada) Listed
ADA, JA8-2016/Title 24 Listed
Horizontal or Vertical Mounting

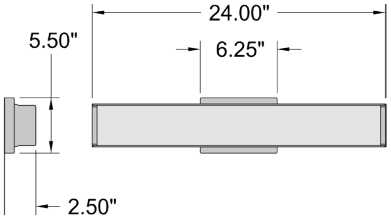

AQUA

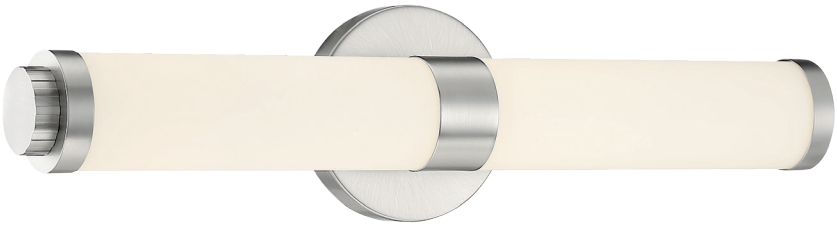

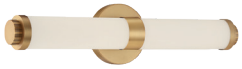

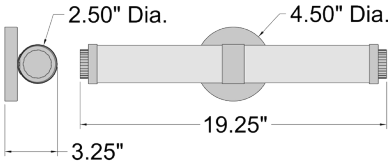

62530LEDD-BG/OPL
Brushed Gold Finish

62530LEDD-BS/OPL
LED Vanity
Brushed Steel Finish
Opal Glass
19.25''W x 4.5''H x 3.25''Ext.
1 x 16 W SSL Dedicated LED (Included)
1034 Delivered Lumens
3000K, 90 CRI, 120v
Dimmable
Damp Location
ETL (US/Canada) Listed
ADA, JA8-2016/Title 24 Listed
Horizontal or Vertical Mounting
Optional End Cap Included

AQUA

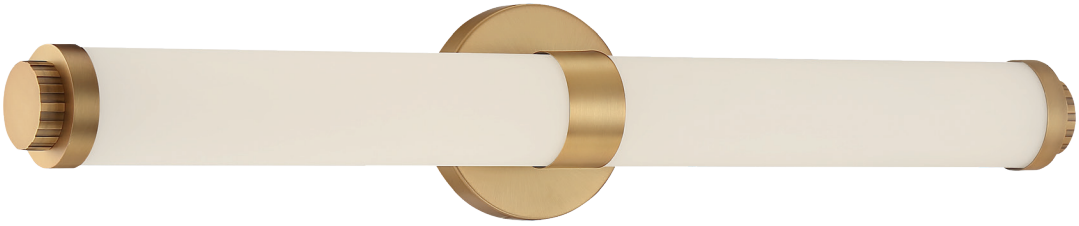

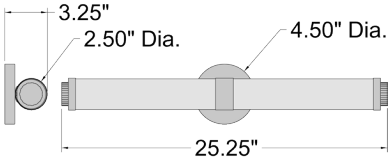

62531LEDD-BS/OPL
Brushed Steel Finish

62531LEDD-BG/OPL
LED Vanity
Brushed Gold Finish
Opal Glass
25.25''W x 4.5''H x 3.25''Ext.
1 x 24 W SSL Dedicated LED (Included)
1583 Delivered Lumens
3000K, 90 CRI, 120v
Dimmable
Damp Location
ETL (US/Canada) Listed
ADA, JA8-2016/Title 24 Listed
Horizontal or Vertical Mounting
Optional End Cap Included

Optional End Cap Included

AQUA

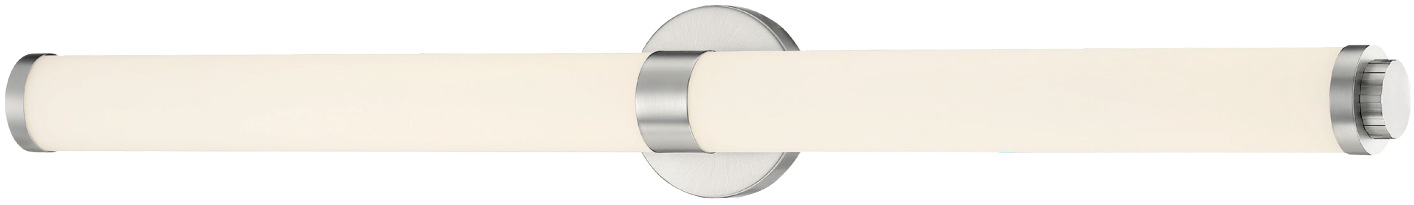

62532LEDD-BS/OPL

LED Vanity

Brushed Steel Finish
Opal Glass
37.25''W x 4.5''H x 3.25''Ext.
1 x 32 W SSL Dedicated LED (Included)
2226 Delivered Lumens
3000K, 60 CRI, 120v
Dimmable
Damp Location
ETL (US/Canada) Listed
ADA, JA8-2016/Title 24 Listed
Horizontal or Vertical Mounting
Optional End Cap Included

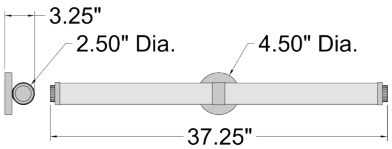

62532LEDD-BG/OPL
Brushed Gold Finish

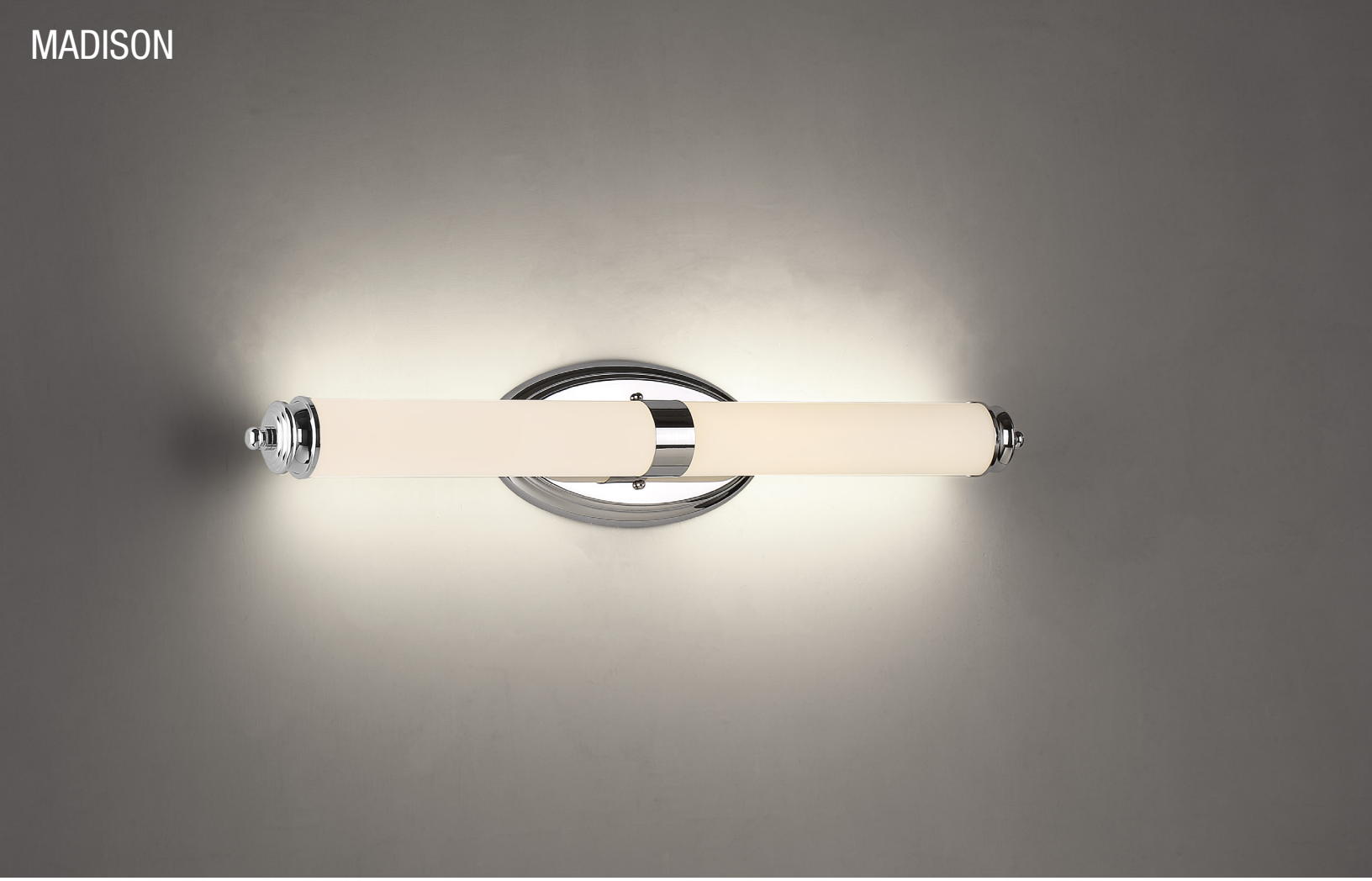

MADISON

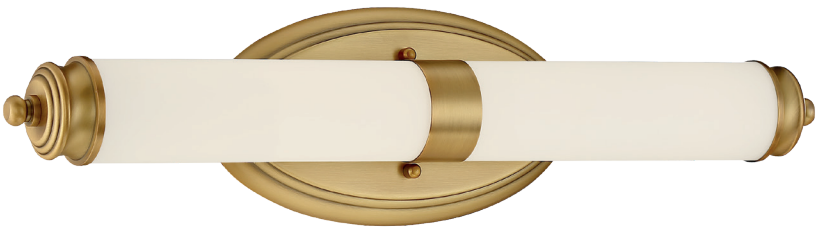

62540LEDD-CH/OPL
Chrome Finish

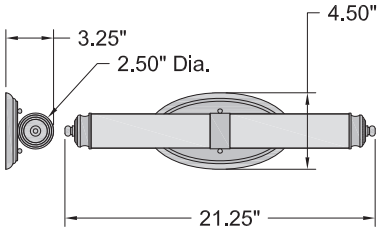

62540LEDD-BG/OPL
LED Vanity
Brushed Gold Finish
Opal Glass
21.25''W x 4.5''H x 3.25''Ext.
1 x 16 W SSL Dedicated LED (Included)
1034 Delivered Lumens
3000K, 90 CRI, 120v
Dimmable
Damp Location
ETL (US/Canada) Listed
ADA, JA8-2016/Title 24 Listed
Horizontal or Vertical Mounting

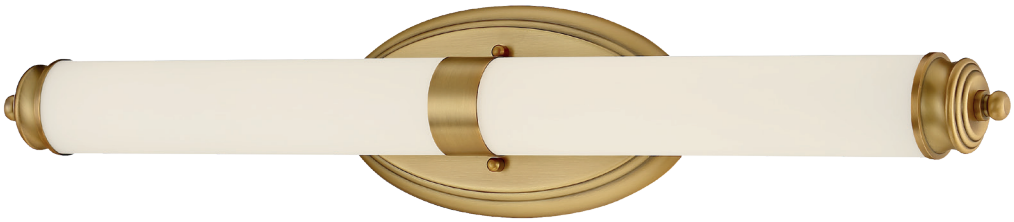

62541LEDD-BG/OPL

LED Vanity

Brushed Gold Finish
Opal Glass
27.25''W x 4.5''H x 3.25''Ext.
1 x 24 W SSL Dedicated LED (Included)
1583 Delivered Lumens
3000K, 90 CRI, 120v
Dimmable
Damp Location
ETL (US/Canada) Listed
ADA, JA8-2016/Title 24 Listed
Horizontal or Vertical Mounting

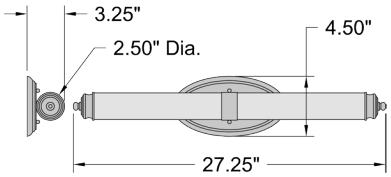

62541LEDD-CH/OPL
Chrome Finish

MADISON

62542LEDD-CH/OPL

LED Vanity

Chrome Finish
Opal Glass
39.25''W x 4.5''H x 3.25''Ext.
1 x 32 W SSL Dedicated LED (Included)
2226 Delivered Lumens
3000K, 90 CRI, 120v
Dimmable
Damp Location
ETL (US/Canada) Listed
ADA, JA8-2016/Title 24 Listed
Horizontal or Vertical Mounting

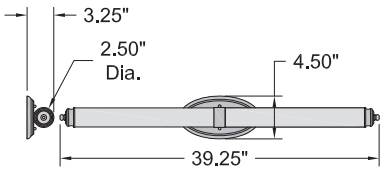

62542LEDD-BG/OPL
Brushed Gold Finish

SUMMIT

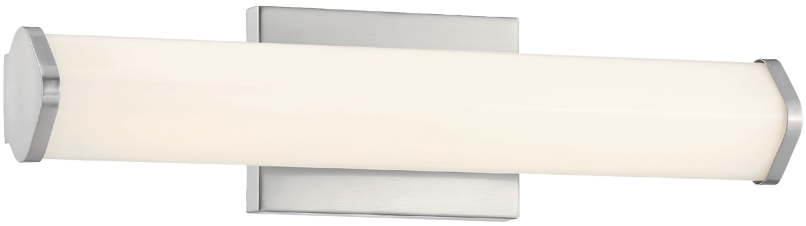

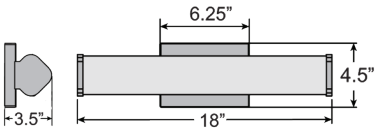

62513LEDD-BS/ACR

LED Vanity
Brushed Steel Finish
Acrylic Lens
18’’W x 4.5’’H x 3.5’’Ext.
1 x 20 W SSL Dedicated LED (Included)
1362 Delivered Lumens
3000K, 90 CRI, 120v
Dimmable
Damp Location
ETL (US/Canada) Listed
ADA, JA8-2016/Title 24 Listed
Horizontal or Vertical Mounting

SUMMIT

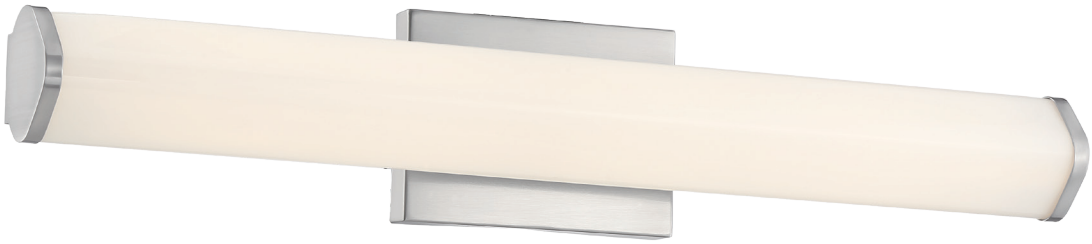

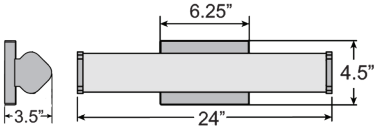

62514LEDD-BS/ACR

LED Vanity
Brushed Steel Finish
Acrylic Lens
24’’W x 4.5’’H x 3.5’’Ext.
1 x 25 W SSL Dedicated LED (Included)
1757 Delivered Lumens
3000K, 90 CRI, 120v
Dimmable
Damp Location
ETL (US/Canada) Listed
ADA, JA8-2016/Title 24 Listed
Horizontal or Vertical Mounting

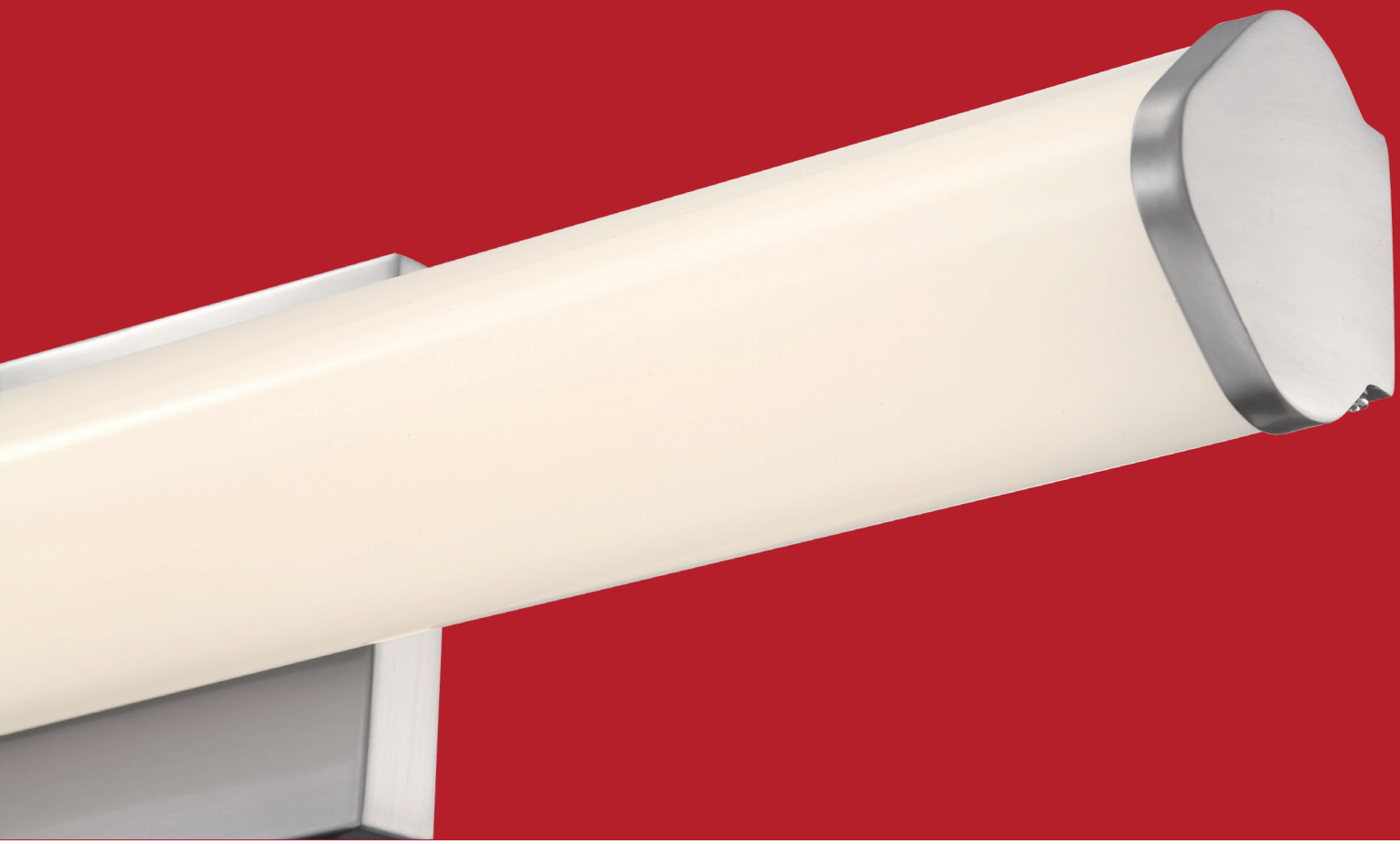

SUMMIT

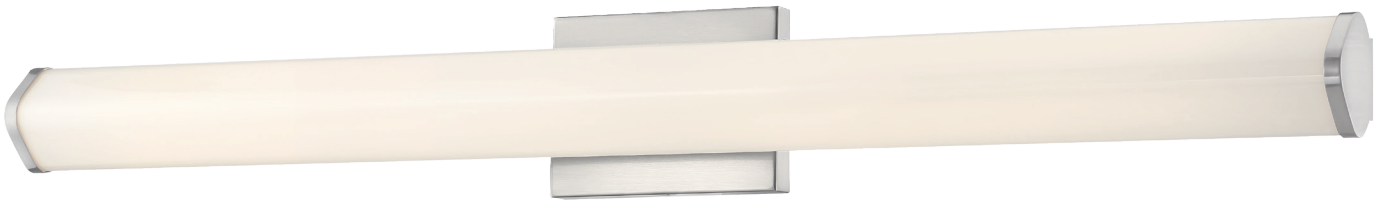

62515LEDD-BS/ACR

LED Vanity

Brushed Steel Finish
Acrylic Lens
36''W x 4.5''H x 3.5''Ext.
1 x 30 W SSL Dedicated LED (Included)
2209 Delivered Lumens
3000K, 90 CRI, 120v
Dimmable
Damp Location
ETL (US/Canada) Listed
ADA, JA8-2016/Title 24 Listed
Horizontal or Vertical Mounting

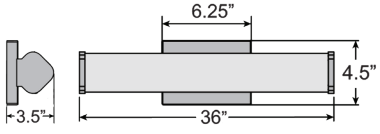

ARC

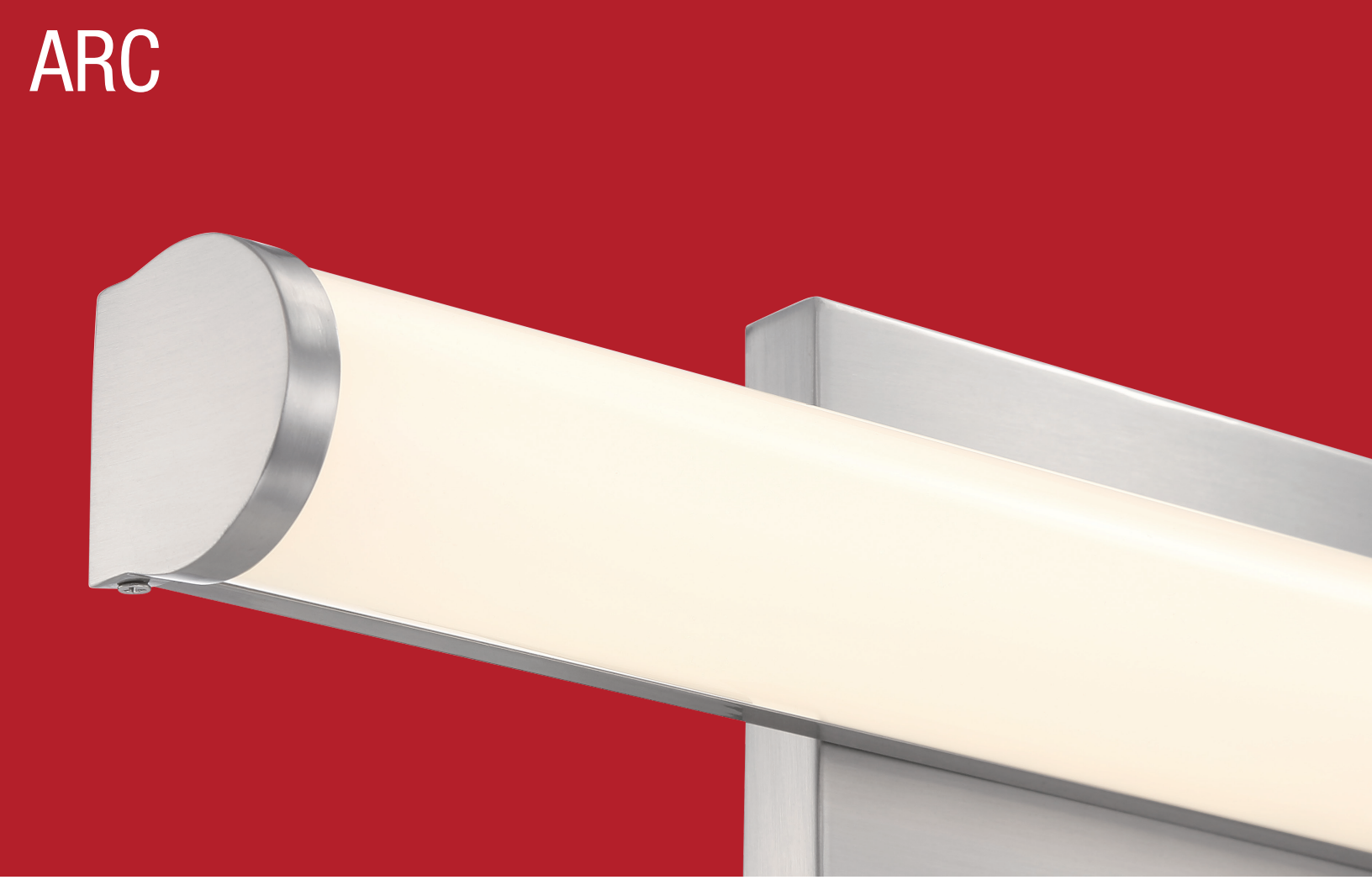

ARC

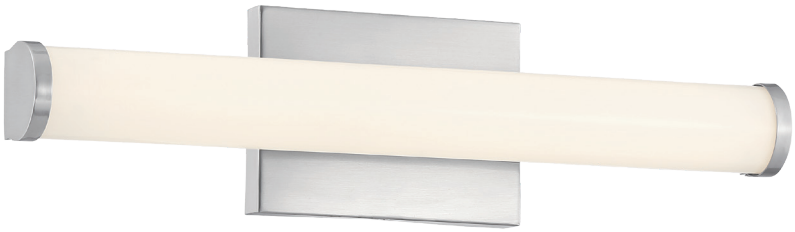

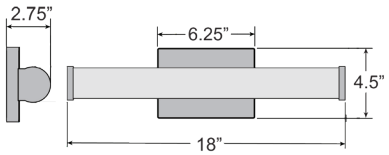

62516LEDD-BS/ACR

LED Vanity
Brushed Steel Finish
Acrylic Lens
18''W x 4.5''H x 2.75''Ext.
1 x 20 W SSL Dedicated LED (Included)
1387 Delivered Lumens
3000K, 90 CRI, 120v
Dimmable
Damp Location
ETL (US/Canada) Listed
ADA, JA8-2016/Title 24 Listed
Horizontal or Vertical Mounting

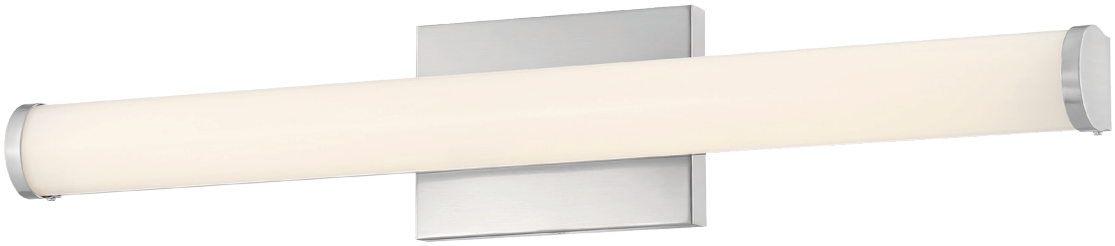

62517LEDD-BS/ACR

LED Vanity
Brushed Steel Finish
Acrylic Lens
24''W x 4.5''H x 2.75''Ext.
1 x 25 W SSL Dedicated LED (Included)
1745 Delivered Lumens
3000K, 90 CRI, 120v
Dimmable
Damp Location
ETL (US/Canada) Listed
ADA, JA8-2016/Title 24 Listed
Horizontal or Vertical Mounting

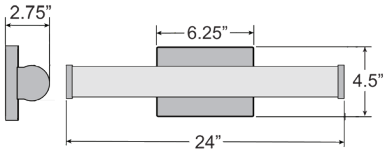

ARC

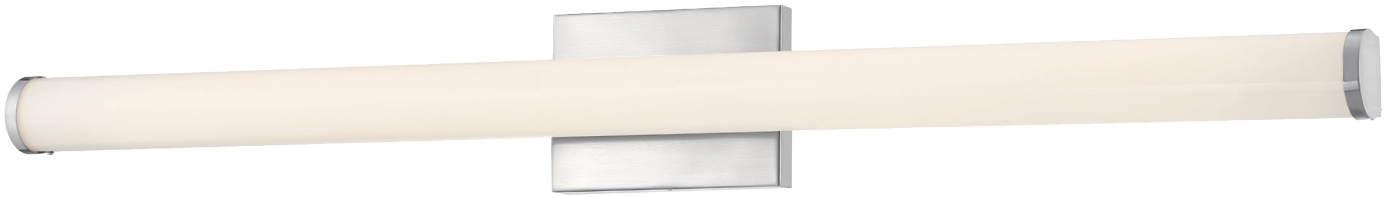

62518LEDD-BS/ACR

LED Vanity
Brushed Steel Finish
Acrylic Lens
36''W x 4.5''H x 2.75''Ext.
1 x 30 W SSL Dedicated LED (Included)
2263 Delivered Lumens
3000K, 90 CRI, 120v
Dimmable
Damp Location
ETL (US/Canada) Listed
ADA, JA8-2016/Title 24 Listed
Horizontal or Vertical Mounting

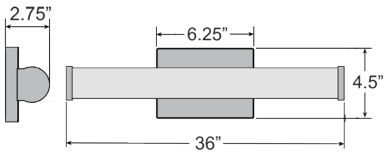

VAIL

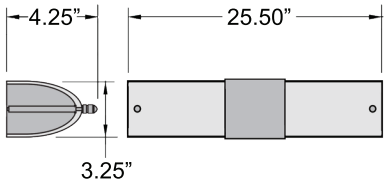

31000LEDD-BS/OPL

LED Vanity
Brushed Steel Finish
Opal Glass
25.5’’W x 4.25’’H x 3.25’’Ext.
1 x 30 W SSL Dedicated LED (Included)
2517 Delivered Lumens
3000K, 90 CRI, 120v
Dimmable
Damp Location
UL (US/Canada) Listed
ADA, Energy Star, JA8-2016/Title 24 Listed
Fully Adjustable Floating Canopy Included
Horizontal or Vertical Mounting

VAIL

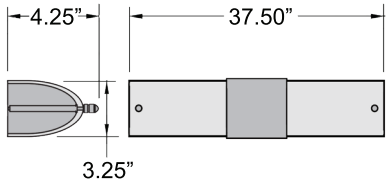

31001LEDD-BS/OPL

LED Vanity
Brushed Steel Finish
Opal Glass
37.5’’W x 4.25’’H x 3.25’’Ext.
1 x 40 W SSL Dedicated LED (Included)
3544 Delivered Lumens
3000K, 90 CRI, 120v
Dimmable
Damp Location
UL (US/Canada) Listed
ADA, Energy Star, JA8-2016/Title 24 Listed
Fully Adjustable Floating Canopy Included
Horizontal or Vertical Mounting

31002-BS/OPL

Vanity

Brushed Steel Finish
Opal Glass
30.25''W x 4.25''H x 3.25''Ext.
1 x 24 W Bi-Pin Fluorescent (Included)
1750 Nominal Lumens
3000K, 120v
Damp Location
UL (US/Canada) Listed
ADA
Fully Adjustable Floating Canopy Included
Horizontal or Vertical Mounting

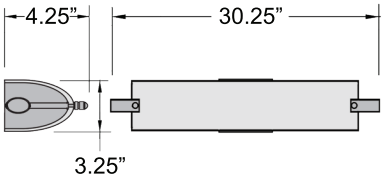

VAIL

31002LEDD-BS/OPL

LED Vanity

Brushed Steel Finish
Opal Glass
30.25''W x 4.25''H x 3.25''Ext.
1 x 30 W SSL Dedicated LED (Included)
2517 Delivered Lumens
3000K, 90 CRI, 120v
Dimmable
Damp Location
UL (US/Canada) Listed
ADA, Energy Star, JA8-2016/Title 24 Listed
Fully Adjustable Floating Canopy Included
Horizontal or Vertical Mounting

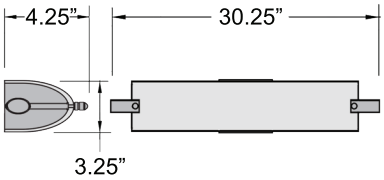

VAIL

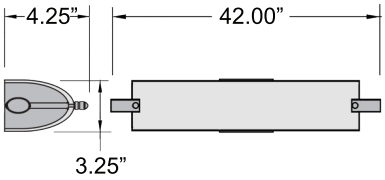

31003-CH/OPL
Vanity
Chrome Finish
Opal Glass
42’’W x 4.25’’H x 3.25’’Ext.
1 x 39 W Bi-Pin Fluorescent (Included)
3100 Nominal Lumens
3000K, 120v
Damp Location
UL (US/Canada) Listed
ADA
Fully Adjustable Floating Canopy Included
Horizontal or Vertical Mounting

31003-BS/OPL
Brushed Steel Finish

VAIL

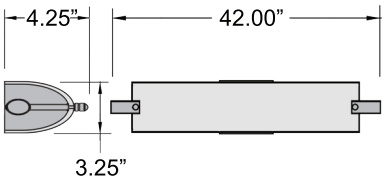

31003LEDD-BS/OPL
LED Vanity
Brushed Steel Finish
Opal Glass
42’’W x 4.25’’H x 3.25’’Ext.
1 x 40 W SSL Dedicated LED (Included)
3544 Delivered Lumens
3000K, 90 CRI, 120v
Dimmable
Damp Location
UL (US/Canada) Listed
ADA, Energy Star, JA8-2016/Title 24 Listed
Fully Adjustable Floating Canopy Included
Horizontal or Vertical Mounting

31003LEDD-CH/OPL
Chrome Finish

31007LEDD-BS/OPL

LED Vanity
Brushed Steel Finish
Opal Glass
23.5''W x 4.25''H x 3.5''Ext.
1 x 15 W SSL Dedicated LED (Included)
1221 Delivered Lumens
3000K, 90 CRI, 120v
Dimmable
Damp Location
UL (US/Canada) Listed
ADA, Energy Star, JA8-2016/Title 24 Listed
Horizontal or Vertical Mounting

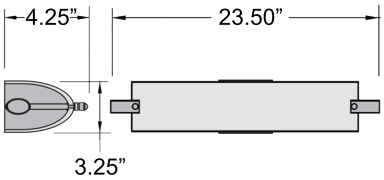

TUBE

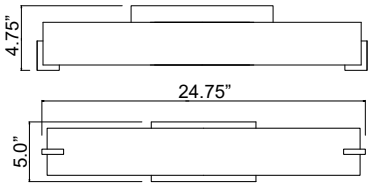

62500LEDD-BS/ACR

LED Vanity

Brushed Steel Finish
Acrylic Lens
24.5’’W x 5’’H x 4.75’’Ext.
1 x 20 W SSL Dedicated LED (Included)
1246 Delivered Lumens
3000K, 90 CRI, 120v
Dimmable
Damp Location
ETL (US/Canada) Listed
JA8-2016/Title 24 Listed
Horizontal or Vertical Mounting

TUBE

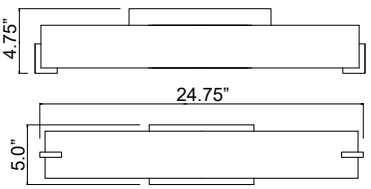

62500LEDD-CH/ACR

LED Vanity

Chrome Finish
Acrylic Lens
24.5’’W x 5’’H x 4.75’’Ext.
1 x 20 W SSL Dedicated LED (Included)
1246 Delivered Lumens
3000K, 90 CRI, 120v
Dimmable
Damp Location
ETL (US/Canada) Listed
JA8-2016/Title 24 Listed
Horizontal or Vertical Mounting

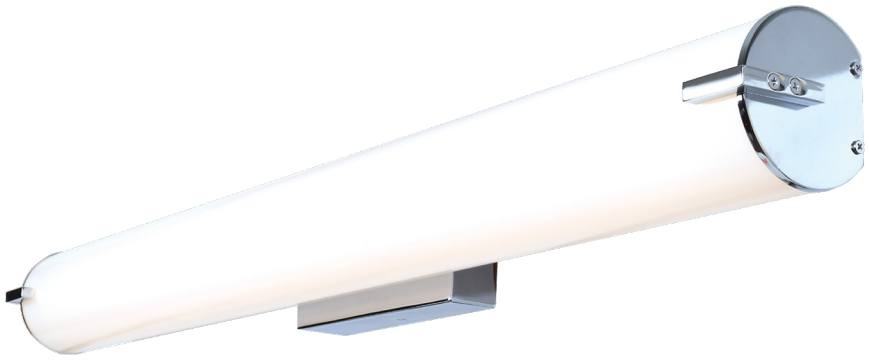

62501LEDD-CH/ACR

LED Vanity
Chrome Finish
Acrylic Lens
36.25''L x 4.5''W x x 4.75''Ext.
1 x 28 W SSL Dedicated LED (Included)
1849 Delivered Lumens
3000K, 90 CRI, 120v
Dimmable
Damp Location
ETL (US/Canada) Listed
JA8-2016/Title 24 Listed
Horizontal or Vertical Mounting

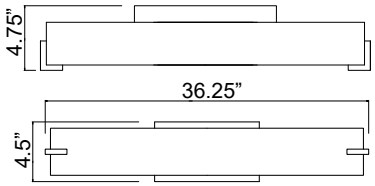

TUBE

62502LEDD-CH/ACR

LED Vanity
Chrome Finish
Acrylic Lens
48.75''W x 4.5''H x 4.75''Ext.
1 x 35 W SSL Dedicated LED (Included)
2247 Delivered Lumens
3000K, 90 CRI, 120v
Dimmable
Damp Location
ETL (US/Canada) Listed
JA8-2016/Title 24 Listed
Horizontal or Vertical Mounting

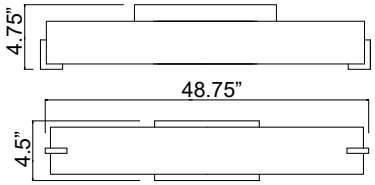

GENEVA

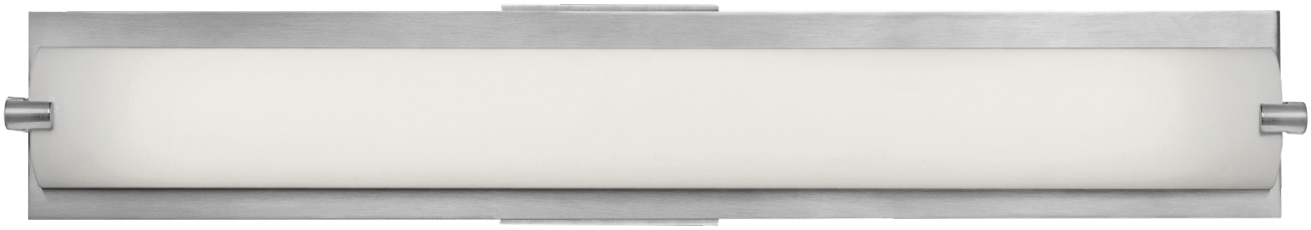

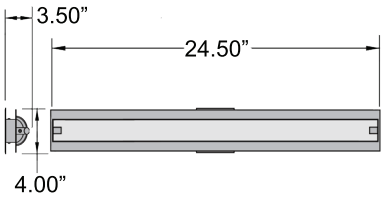

31010-BS/OPL

Vanity

Brushed Steel Finish
Opal Glass
24.5’’W x 4’’H x 3.5’’Ext.
1 x 24 W Bi-Pin Fluorescent (Included)
1750 Nominal Lumens
3000K, 120v
Damp Location
ETL (US/Canada) Listed
ADA
Fully Adjustable Floating Canopy Included
Horizontal or Vertical Mounting

GENEVA

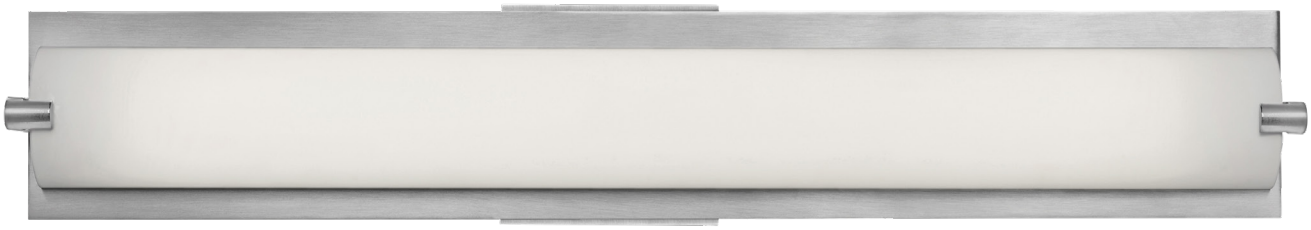

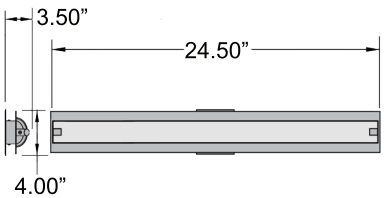

31010LEDD-BS/OPL

LED Vanity

Brushed Steel Finish
Opal Glass
24.5’’W x 4’’H x 3.5’’Ext.
1 x 30 W SSL Dedicated LED (Included)
2517 Delivered Lumens
3000K, 90 CRI, 120v
Dimmable
Damp Location
UL (US/Canada) Listed
ADA, Energy Star, JA8-2016/Title 24 Listed
Fully Adjustable Floating Canopy Included
Horizontal or Vertical Mounting

63129LEDDLP-MSS/CLR

1 Light LED Wall Sconce & Vanity

Mirrored Stainless Steel Finish
Clear Glass
5.75''W x 10.5''H x 7''Ext.
1 x 4.5 W G9 Replaceable LED (Included)
450 Nominal Lumens
3000K, 80 CRI, 120v
Dimmable
Damp Location
UL (US/Canada) Listed
Title 20

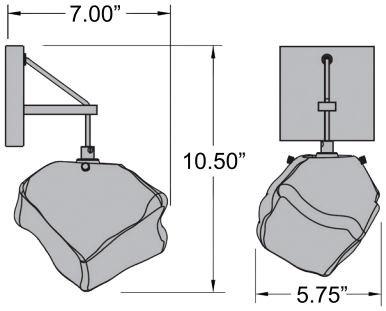

BOULDER

63130LEDDLP-MSS/CLR

3 Light LED Vanity

Mirrored Stainless Steel Finish
Clear Glass
23''W x 11.25''H x 7''Ext.
3 x 4.5 W G9 Replaceable LED (Included)
1350 Nominal Lumens
3000K, 80 CRI, 120v
Dimmable
Damp Location
UL (US/Canada) Listed
Title 20

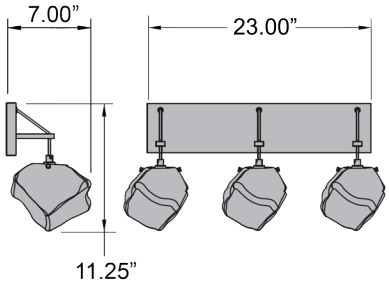

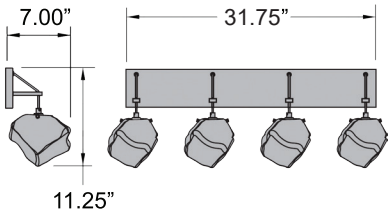

63131LEDDLP-MSS/CLR

4 Light LED Vanity

Mirrored Stainless Steel Finish
Clear Glass
31.75’’W x 11.25’’H x 7’’Ext.
4 x 4.5 W G9 Replaceable LED (Included)
1800 Nominal Lumens
3000K, 80 CRI, 120v
Dimmable
Damp Location
UL (US/Canada) Listed
Title 20

OSLO

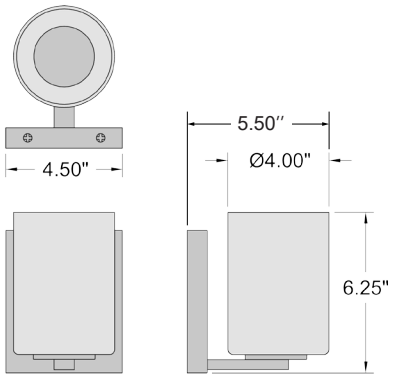

62580LEDDLP-CH/OPL

1 Light LED Wall Sconce & Vanity

Chrome Finish
Opal Glass
4.5''W x 6.25''H x 5.5''Ext.
1 x 9 W E-26 Replaceable LED (Included)
800 Nominal Lumens
3000K, 90 CRI, 120v
Dimmable
Damp Location
UL (US/Canada) Listed
JA8-2016/Title 24 Listed
Horizontal or Vertical Mounting

OSLO

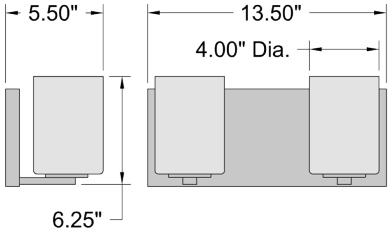

62581LEDDLP-CH/OPL

2 Light LED Vanity

Chrome Finish
Opal Glass
13.5''W x 6.25''H x 5.5''Ext.
2 x 9 W E-26 Replaceable LED (Included)
1600 Nominal Lumens
3000K, 90 CRI, 120v
Dimmable
Damp Location
UL (US/Canada) Listed
JA8-2016/Title 24 Listed
Horizontal or Vertical Mounting

62582LEDDLP-CH/OPL

3 Light LED Vanity

Chrome Finish
Opal Glass
22''W x 6.25''H x 5.5''Ext.
3 x 9 W E-26 Replaceable LED (Included)
2400 Nominal Lumens
3000K, 90 CRI, 120v
Dimmable
Damp Location
UL (US/Canada) Listed
JA8-2016/Title 24 Listed
Horizontal or Vertical Mounting

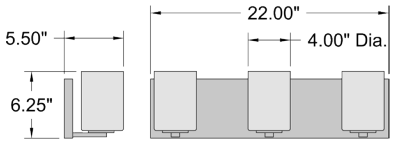

OSLO

62583LEDDLP-CH/OPL

4 Light LED Vanity

Chrome Finish
Opal Glass
30''W x 6.25''H x 5.5''Ext.
4 x 9 W E-26 Replaceable LED (Included)
3200 Nominal Lumens
3000K, 90 CRI, 120v
Dimmable
Damp Location
UL (US/Canada) Listed
JA8-2016/Title 24 Listed
Horizontal or Vertical Mounting

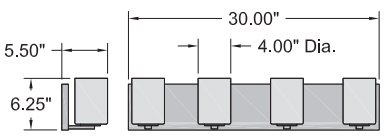

PERCH

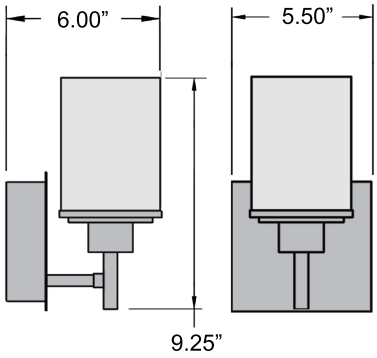

62509LEDD-BS/CSL

1 Light LED Wall Sconce & Vanity

Brushed Steel Finish
Cream Silk Lined Glass
5.5’’W x 9.25’’H x 6’’Ext.
1 x 5 W SSL Dedicated LED (Included)
570 Nominal Lumens
3000K, 90 CRI, 120v
Dimmable
Damp Location
ETL (US/Canada) Listed

PERCH

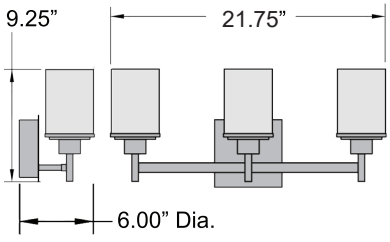

62511LEDD-BS/CSL

3 Light LED Vanity

Brushed Steel Finish
Cream Silk Lined Glass
21.75’’W x 9.25’’H x 6’’Ext.
3 x 5 W SSL Dedicated LED (Included)
1710 Nominal Lumens
3000K, 90 CRI, 120v
Dimmable
Damp Location
ETL (US/Canada) Listed

62512LEDD-BS/CSL

4 Light LED Vanity

Brushed Steel Finish
Cream Silk Lined Glass
31''W x 9.25''H x 6''Ext.
4 x 5 W SSL Dedicated LED (Included)
2280 Nominal Lumens
3000K, 90 CRI, 120v
Dimmable
Damp Location
ETL (US/Canada) Listed

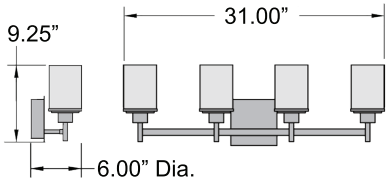

ARCHI

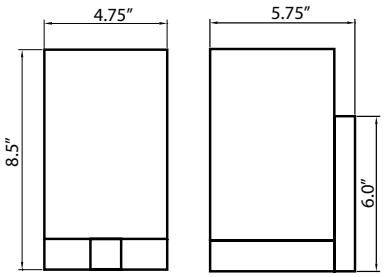

50175-BS/OPL

1 Light Wall Sconce & Vanity

Brushed Steel Finish
Opal Glass
4.75''W x 8.5''H x 5.75''Ext.
1 x 60 W E-26 Incandescent
120v
Dimmable
Damp Location
ETL (US/Canada) Listed

ARCHI

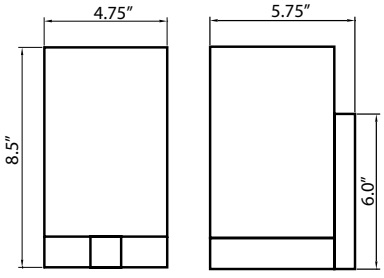

50175LEDDLP-BS/OPL

1 Light LED Wall Sconce & Vanity

Brushed Steel Finish
Opal Glass
4.75''W x 8.5''H x 5.75''Ext.
1 x 10 W E-26 Replaceable LED (Included)
800 Nominal Lumens
3000K, 90 CRI, 120v
Dimmable
Damp Location
ETL (US/Canada) Listed
JA8-2016/Title 24 Listed, Title 20

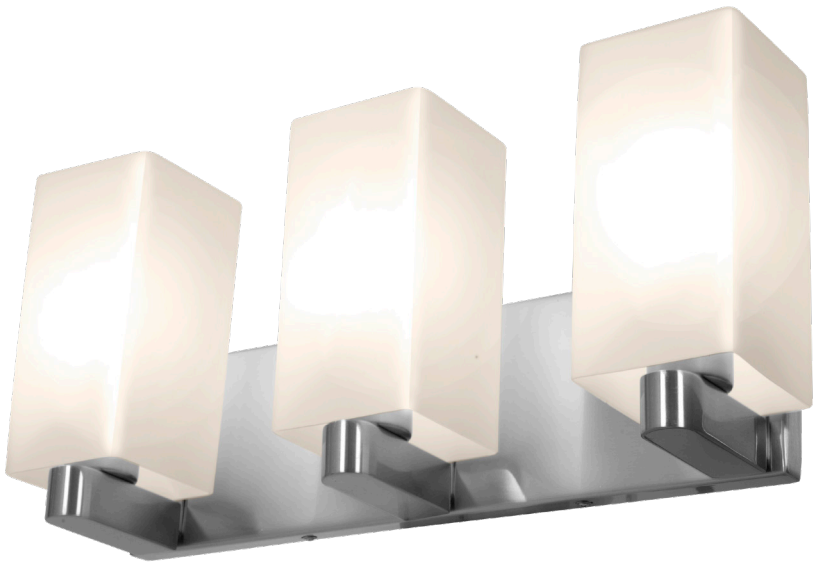

50177-BS/OPL

3 Light Vanity
Brushed Steel Finish
Opal Glass
18''W x 8.5''H x 5.75''Ext.
3 x 60 W E-26 Incandescent
120v
Dimmable
Damp Location
ETL (US/Canada) Listed

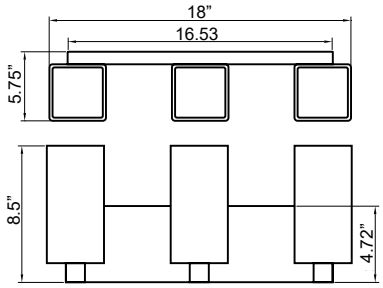

ARCHI

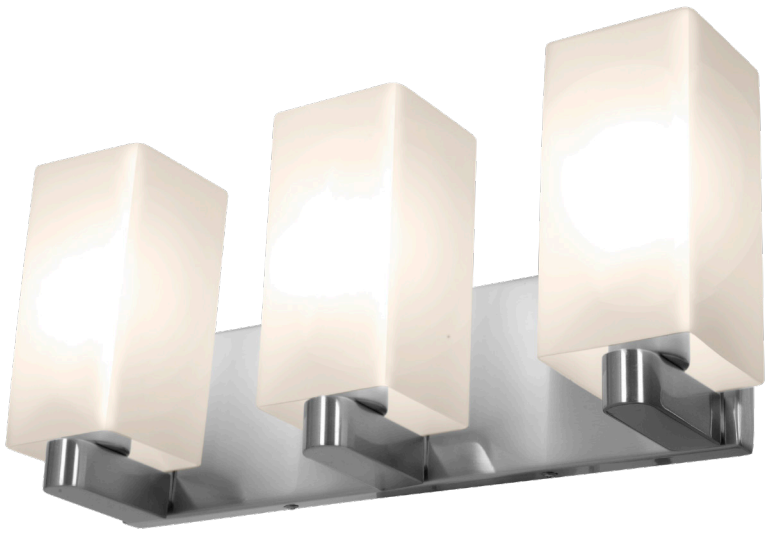

50177LEDDLP-BS/OPL

3 Light LED Vanity
Brushed Steel Finish
Opal Glass
18''W x 8.5''H x 5.75''Ext.
3 x 10 W E-26 Replaceable LED (Included)
2400 Nominal Lumens
3000K, 90 CRI, 120v
Dimmable
Damp Location
ETL (US/Canada) Listed
JA8-2016/Title 24 Listed, Title 20

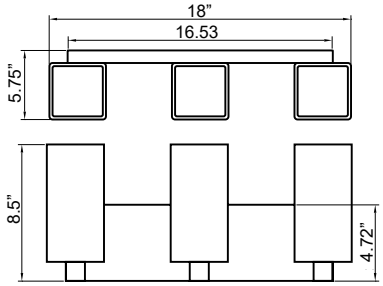

ARCHI

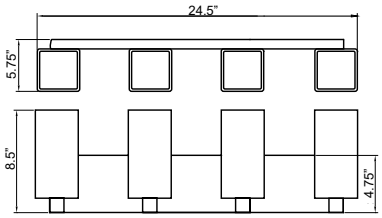

50178-BS/OPL

4 Light Vanity

Brushed Steel Finish
Opal Glass
24.5''L x 8.5''H x 5.75''Ext.
4 x 60 W E-26 Incandescent
120v
Dimmable
Damp Location
ETL (US/Canada) Listed

ARCHI

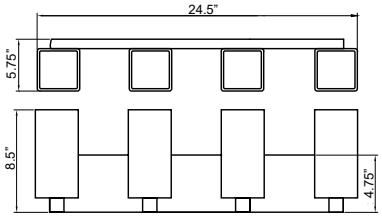

50178LEDDLP-BS/OPL

4 Light LED Vanity

Brushed Steel Finish
Opal Glass
24.5''L x 8.5''H x 5.75''Ext.
4 x 10 W E-26 Replaceable LED (Included)
3200 Nominal Lumens
3000K, 90 CRI, 120v
Dimmable
Damp Location
ETL (US/Canada) Listed
JA8-2016/Title 24 Listed, Title 20

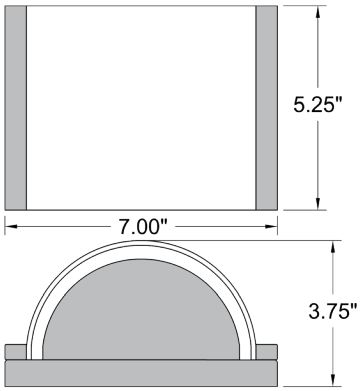

62291LEDD-BS/OPL

1 Light LED Wall Sconce & Vanity

Brushed Steel Finish
Opal Glass
7''W x 5.25''H x 3.75''Ext.
1 x 9 W SSL Dedicated LED (Included)
800 Nominal Lumens
3000K, 90 CRI, 120v
Dimmable
Damp Location
UL (US/Canada) Listed
ADA, JA8-2016/Title 24 Listed

62291LEDD-BRZ/OPL
Bronze Finish

NITRO2

62293LEDD-BRZ/OPL
Bronze Finish

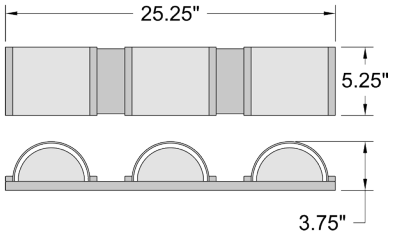

62293LEDD-BS/OPL
3 Light LED Vanity
Brushed Steel Finish
Opal Glass
25.25''W x 5.25''H x 3.75''Ext.
3 x 9 W SSL Dedicated LED (Included)
2400 Nominal Lumens
3000K, 90 CRI, 120v
Dimmable
Damp Location
UL (US/Canada) Listed
ADA, JA8-2016/Title 24 Listed

NITRO2

62294LEDD-BS/OPL
Brushed Steel Finish

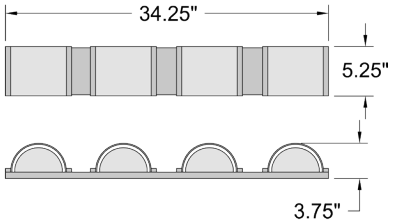

62294LEDD-BRZ/OPL
4 Light LED Vanity
Bronze Finish
Opal Glass
34.25''W x 5.25''H x 3.75''Ext.
4 x 9 W SSL Dedicated LED (Included)
3200 Nominal Lumens
3000K, 90 CRI, 120v
Dimmable
Damp Location
UL (US/Canada) Listed
ADA, JA8-2016/Title 24 Listed

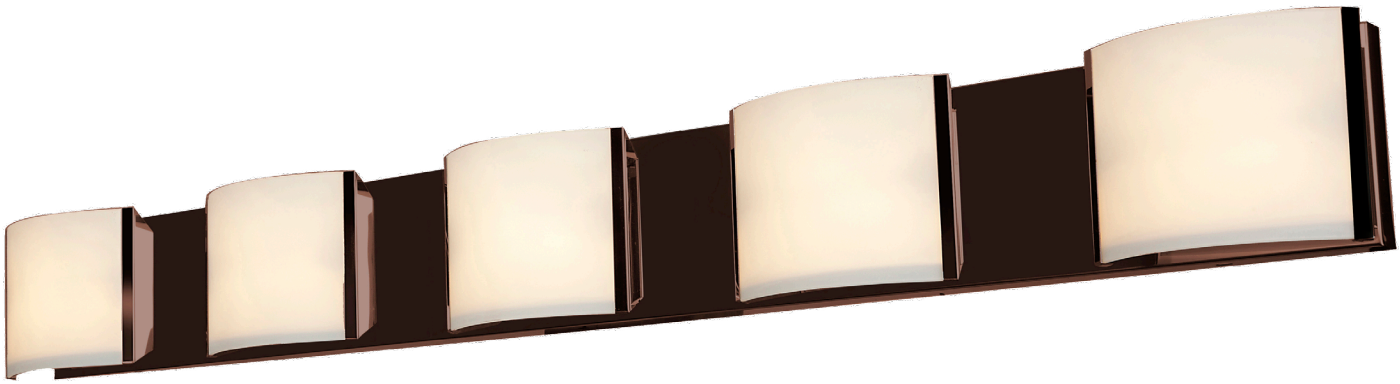

62295LEDD-BRZ/OPL

5 Light LED Vanity

Bronze Finish
Opal Glass
48.75''W x 5.25''H x 3.75''Ext.
5 x 9 W SSL Dedicated LED (Included)
4000 Nominal Lumens
3000K, 90 CRI, 120v
Dimmable
Damp Location
UL (US/Canada) Listed
ADA, JA8-2016/Title 24 Listed

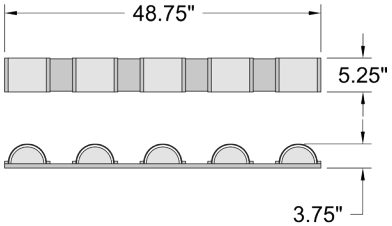

62295LEDD-BS/OPL
Brushed Steel Finish

HELIUM

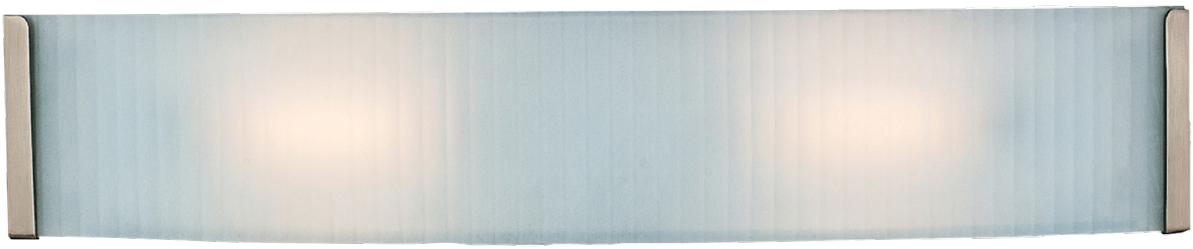

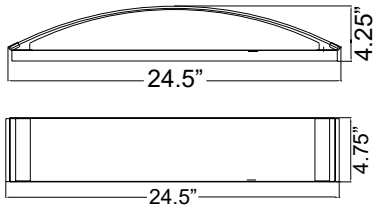

62042-BS/CKF

2 Light Vanity

Brushed Steel Finish
Checkered Frosted Glass
24.5’’L x 4.75’’H x 4.25’’Ext.
2 x 100 W R7s Halogen (Included)
3300 Nominal Lumens
2900K, 120v
Dimmable
Damp Location
UL (US/Canada) Listed

HELIUM

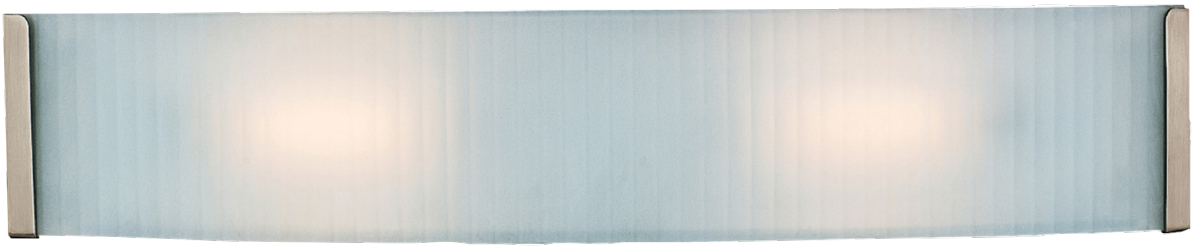

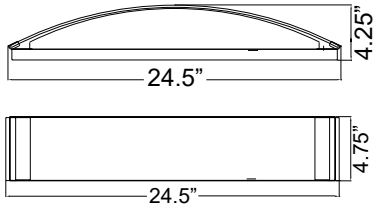

62042LED-BS/CKF

LED Vanity

Brushed Steel Finish
Checkered Frosted Glass
24.5’’L x 4.75’’H x 4.25’’Ext.
1 x 15 W SSL Dedicated LED (Included)
1520 Nominal Lumens
3000K, 90 CRI, 120v
Damp Location
UL (US/Canada) Listed
Energy Star

62043-BS/CKF

2 Light Vanity

Brushed Steel Finish
Checkered Frosted Glass
32''W x 4.75''H x 4.25''Ext.
2 x 100 W R7s Halogen (Included)
3300 Nominal Lumens
2900K, 120v
Dimmable
Damp Location
UL (US/Canada) Listed

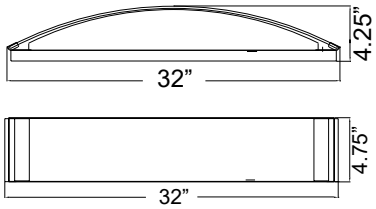

HELIUM

62043LEDD-BS/CKF

LED Vanity

Brushed Steel Finish
Checkered Frosted Glass
32''W x 4.75''H x 4.25''Ext.
1 x 30 W SSL Dedicated LED (Included)
3040 Nominal Lumens
3000K, 90 CRI, 120v
Dimmable
Damp Location
UL (US/Canada) Listed
Energy Star, JA8-2016/Title 24 Listed

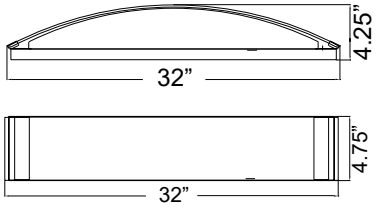

OXYGEN

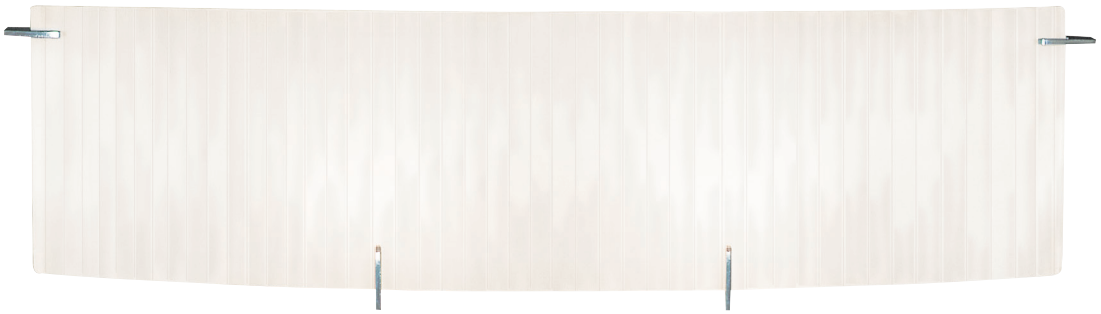

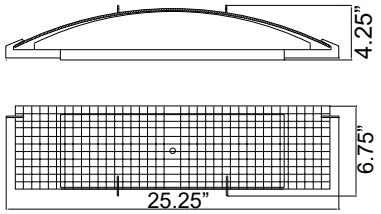

62052-CH/CKF

2 Light Vanity

Chrome Finish
Checkered Frosted Glass
25.25’’W x 6.75’’H x 4.25’’Ext.
2 x 150 W R7s Halogen (Included)
5200 Nominal Lumens
2900K, 120v
Dimmable
Damp Location
UL (US/Canada) Listed

OXYGEN

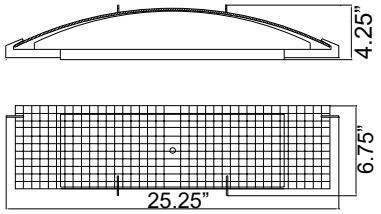

62052LED-CH/CKF

LED Vanity

Chrome Finish
Checkered Frosted Glass
25.25’’W x 6.75’’H x 4.25’’Ext.
1 x 15 W SSL Dedicated LED (Included)
1520 Nominal Lumens
3000K, 90 CRI, 120v
Damp Location
UL (US/Canada) Listed
Energy Star

62053-CH/CKF

2 Light Vanity

Chrome Finish
Checkered Frosted Glass
33.5''W x 6.75''H x 4.75''Ext.
2 x 150 W R7s Halogen (Included)
5200 Nominal Lumens
2900K, , 120v
Dimmable
Damp Location
UL (US/Canada) Listed

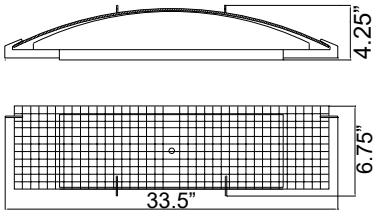

OXYGEN

62053LEDD-CH/CKF

LED Vanity

Chrome Finish
Checkered Frosted Glass
33.5''W x 6.75''H x 4.75''Ext.
1 x 30 W SSL Dedicated LED (Included)
3040 Nominal Lumens
3000K, 90 CRI, 120v
Dimmable
Damp Location
UL (US/Canada) Listed
Energy Star, JA8-2016/Title 24 Listed

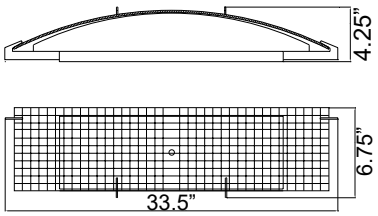

PENINSULA

MIRROR

PENINSULA

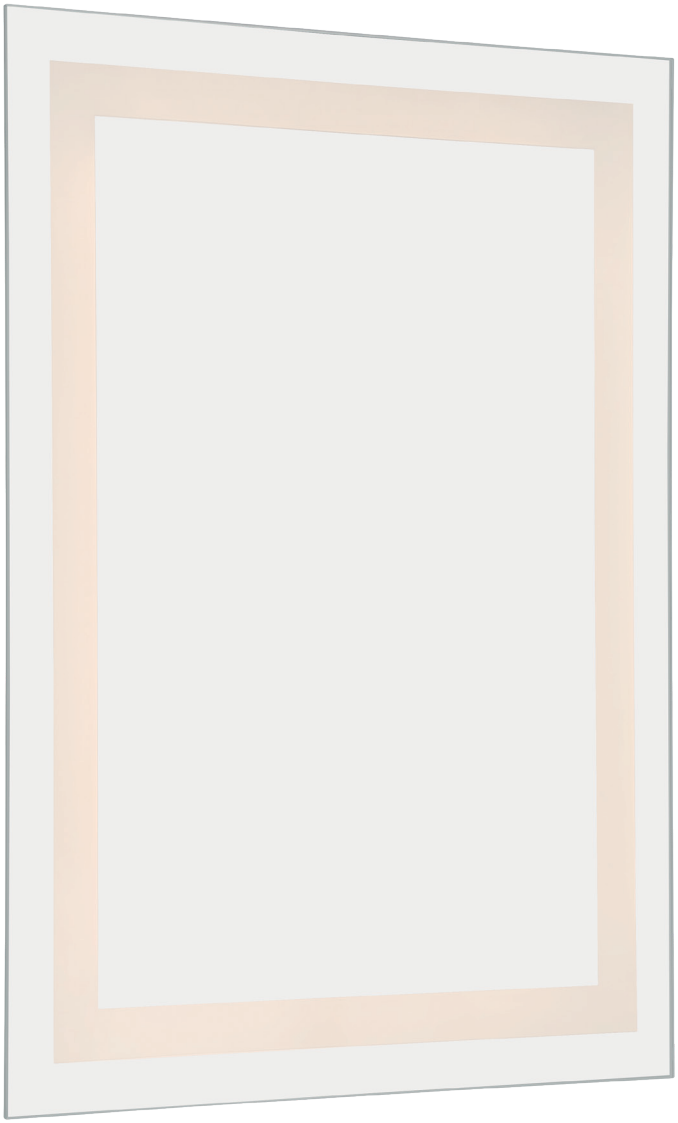

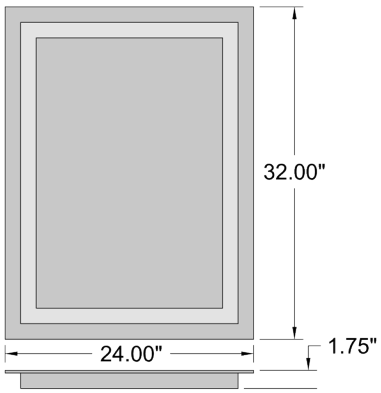

71005LED-MIR

LED Mirror

Mirrored Glass

24''W x 32''H x 1.75''Ext.

1 x 25 W SSL Dedicated LED (Included)

1257 Delivered Lumens

3000K, 90 CRI, 120v

Damp Location

ETL (US/Canada) Listed

ADA

Horizontal or Vertical Mounting

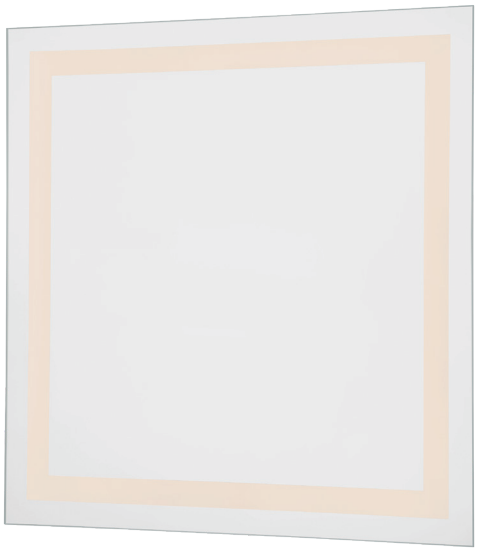

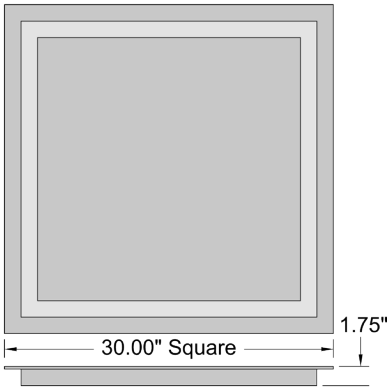

71001LED-MIR

LED Mirror
Mirrored Glass
30''W x 30''H x 1.75''Ext.
1 x 25 W SSL Dedicated LED (Included)
1315 Delivered Lumens
3000K, 90 CRI, 120v
Damp Location
ETL (US/Canada) Listed
ADA

PENINSULA

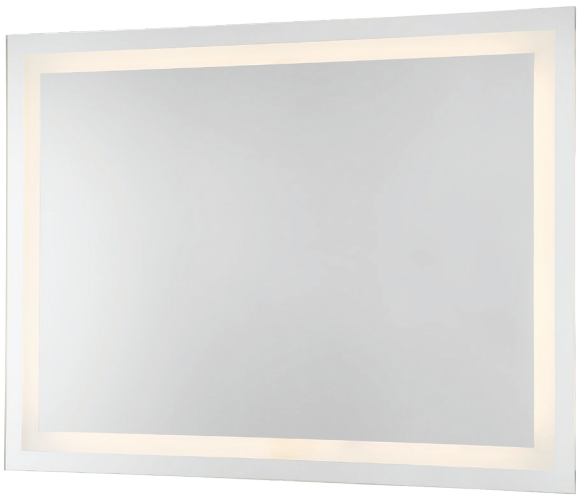

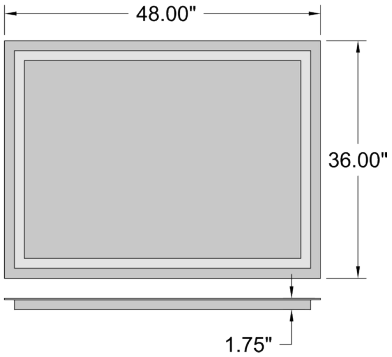

71006LED-MIR

LED Mirror
Mirrored Glass
36''W x 48''H x 1.75''Ext.
1 x 45 W SSL Dedicated LED (Included)
1769 Delivered Lumens
3000K, 90 CRI, 120v
Damp Location
ETL (US/Canada) Listed
ADA
Horizontal or Vertical Mounting

SILO

OUTDOOR

AVALON

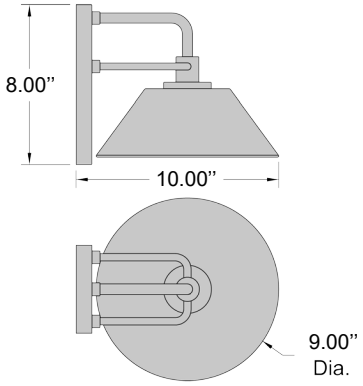

20130LEDDMG-BL

Outdoor LED Wall Mount

Black Finish
9’’W x 8’’H x 10’’Ext.
1 x 8 W SSL Dedicated LED (Included)
373 Delivered Lumens
3000K, 90 CRI, 120v
Dimmable
Wet Location
ETL (US/Canada) Listed
Dark Sky, JA8-2016/Title 24 Listed, Marine Grade

AVALON

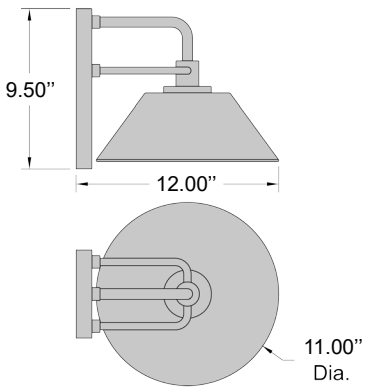

20131LEDDMG-BL

Outdoor LED Wall Mount

Black Finish
11’’W x 9.5’’H x 12’’Ext.
1 x 12 W SSL Dedicated LED (Included)
437 Delivered Lumens
3000K, 90 CRI, 120v
Dimmable
Wet Location
ETL (US/Canada) Listed
Dark Sky, JA8-2016/Title 24 Listed, Marine Grade

SILO

20060LEDDMG-SAT/SDG

Outdoor LED Wall Mount

Satin Finish
Seeded Glass
10.25''W x 7.5''H x 11.5''Ext.
1 x 9 W SSL Dedicated LED (Included)
434 Delivered Lumens
4000K, 90 CRI, 120v
Dimmable
Wet Location
ETL (US/Canada) Listed
JA8-2016/Title 24 Listed, Marine Grade

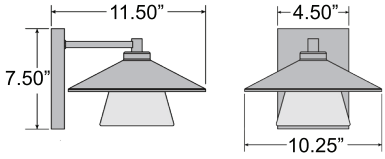

20060LEDDMG-BL/SDG

Black Finish
3000K Only

SOLANO

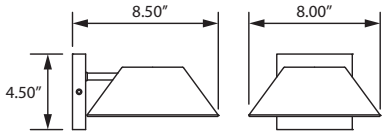

20133LEDDMG-BL

Outdoor LED Wall Mount

Black Finish
8''W x 4.5''H x 8.5''Ext.
1 x 12 W SSL Dedicated LED (Included)
704 Delivered Lumens
3000K, 90 CRI, 120v
Dimmable
Wet Location
ETL (US/Canada) Listed
Dark Sky, JA8-2016/Title 24 Listed, Marine Grade

SOLANO

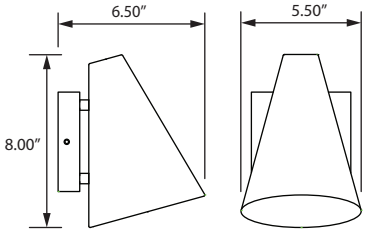

20143LEDDMG-BL

Outdoor LED Wall Mount

Black Finish
5.5''W x 8''H x 6.5''Ext.
1 x 8 W SSL Dedicated LED (Included)
386 Delivered Lumens
3000K, 90 CRI, 120v
Dimmable
Wet Location
ETL (US/Canada) Listed
JA8-2016/Title 24 Listed, Marine Grade

20137LEDDMG-BL

Outdoor LED Wall Mount

Black Finish
5''W x 11.5''H x 6.5''Ext.
1 x 8 W SSL Dedicated LED (Included)
465 Delivered Lumens
3000K, 90 CRI, 120v
Dimmable
Wet Location
ETL (US/Canada) Listed
Dark Sky, JA8-2016/Title 24 Listed, Marine Grade

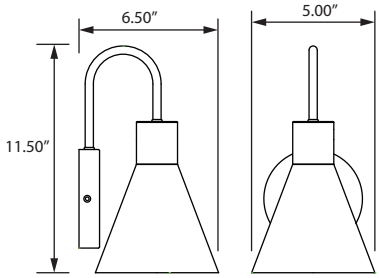

SOLANO

20135LEDDMG-BL

Outdoor LED Wall Mount

Black Finish
6.75''W x 7.75''H x 9.75''Ext.
1 x 12 W SSL Dedicated LED (Included)
675 Delivered Lumens
3000K, 90 CRI, 120v
Dimmable
Wet Location
ETL (US/Canada) Listed
Dark Sky, JA8-2016/Title 24 Listed, Marine Grade

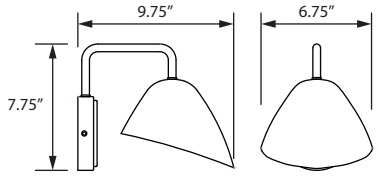

VIVRE

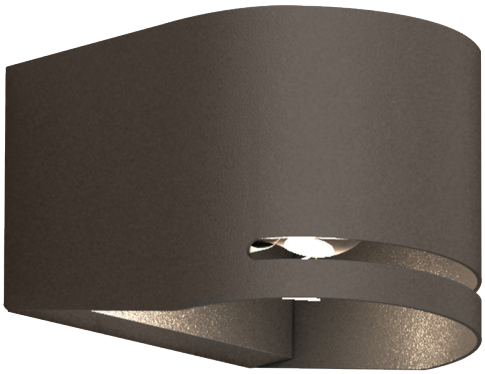

20015LEDDMG-SAT
Satin Finish

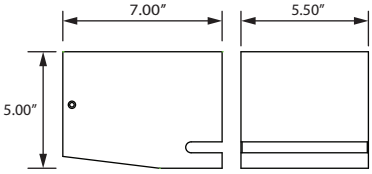

20015LEDDMG-BRZ
Outdoor LED Wall Mount
Bronze Finish
5.5''W x 5''H x 7''Ext.
1 x 8 W SSL Dedicated LED (Included)
289 Delivered Lumens
3000K, 90 CRI, 120v
Dimmable
Wet Location
ETL (US/Canada) Listed
Dark Sky, JA8-2016/Title 24 Listed Listed, Marine Grade

LA VIDA

20017LEDDMG-BL
Black Finish

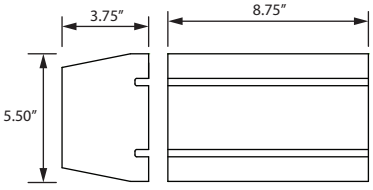

20017LEDDMG-SAT
Bi-Directional Outdoor LED Wall Mount
Satin Finish
8.75''W x 5.5''H x 3.75''Ext.
2 x 10 W SSL Dedicated LED (Included)
901 Delivered Lumens
3000K, 90 CRI, 120v
Dimmable
Wet Location
ETL (US/Canada) Listed
ADA, JA8-2016/Title 24 Listed Listed, Marine Grade

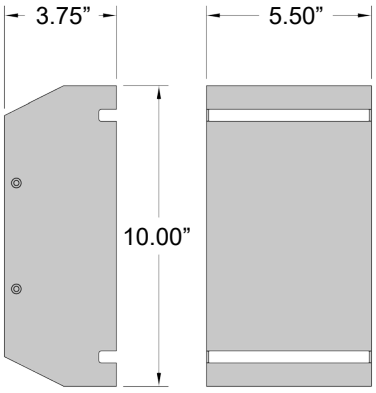

20016LEDDMG-BL

Bi-Directional Outdoor LED Wall Mount

Black Finish
5.5’’W x 10’’H x 3.75’’Ext.
2 x 8 W SSL Dedicated LED (Included)
396 Delivered Lumens
3000K, 90 CRI, 120v
Dimmable
Wet Location
ETL (US/Canada) Listed
ADA, JA8-2016/Title 24 Listed Listed, Marine Grade

20016LEDDMG-SAT
Satin Finish

AMORA

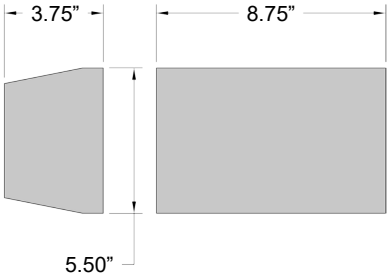

20019LEDDMG-BL
Black Finish

20019LEDDMG-SAT
Bi-Directional Outdoor LED Wall Mount
Satin Finish
8.75’’W x 5.5’’H x 3.75’’Ext.
2 x 10 W SSL Dedicated LED (Included)
911 Delivered Lumens
3000K, 90 CRI, 120v
Dimmable
Wet Location
ETL (US/Canada) Listed
ADA, JA8-2016/Title 24 Listed, Marine Grade

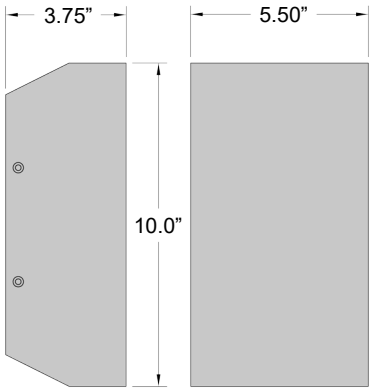

20018LEDDMG-BL

Bi-Directional Outdoor LED Wall Mount

Black Finish
5.5’’W x 10’’H x 3.75’’Ext.
2 x 8 W SSL Dedicated LED (Included)
388 Delivered Lumens
3000K, 90 CRI, 120v
Dimmable
Wet Location
ETL (US/Canada) Listed
ADA, JA8-2016/Title 24 Listed, Marine Grade

20018LEDDMG-SAT
Satin Finish

EDGE

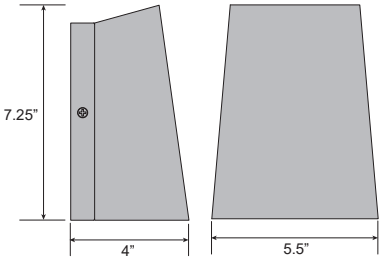

20050LEDDMG-BL
Black Finish

20050LEDDMG-SAT
Outdoor LED Wall Mount
Satin Finish
Frosted Glass
5.5''W x 7.25''H x 4''Ext.
1 x 9 W SSL Dedicated LED (Included)
448 Delivered Lumens
3000K, 90 CRI, 120v
Dimmable
Wet Location
ETL (US/Canada) Listed
ADA, Dark Sky, JA8-2016/Title 24 Listed, Marine Grade

SQUARE

20399LEDMG-BL
Black Finish

20399LEDMG-BRZ
Bronze Finish

20399LEDMG-WH
White Finish

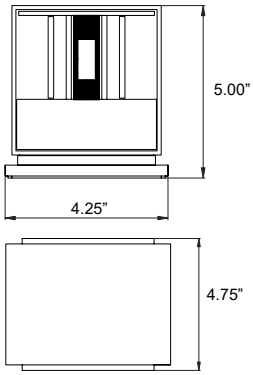

20399LEDMG-SAT
Bi-Directional Outdoor LED Wall Mount
Satin Finish
4.25’’W x 4.75’’H x 5’’Ext.
2 x 3 W SSL Dedicated LED (Included)
312 Delivered Lumens
3000K, 80 CRI, 120v
Wet Location
UL (US/Canada) Listed
JA8-2016/Title 24 Listed, Marine Grade
Bi-Directional Light Source with *4 Adjustable Louvers*

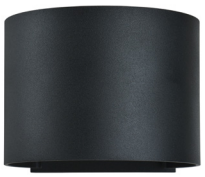

20399LEDMGRND-BL
Black Finish

20399LEDMGRND-SAT
Satin Finish

20399LEDMGRND-WH
White Finish

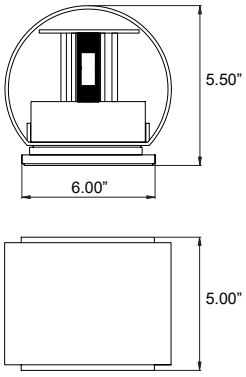

20399LEDMGRND-BRZ

Bi-Directional Outdoor LED Wall Mount
Bronze Finish
6''W x 5''H x 5.5''Ext.
2 x 3 W SSL Dedicated LED (Included)
312 Delivered Lumens
3000K, 80 CRI, 120v
Wet Location
UL (US/Canada) Listed
JA8-2016/Title 24 Listed, Marine Grade
Bi-Directional Light Source with *4 Adjustable Louvers*

CONE

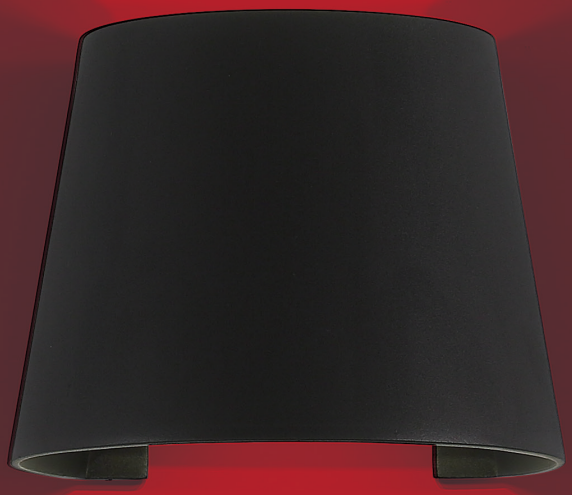

20399LEDMGCNE-BL
Black Finish

20399LEDMGCNE-BRZ
Bronze Finish

20399LEDMGCNE-SAT
Satin Finish

20399LEDMGCNE-WH

Bi-Directional Outdoor LED Wall Mount
White Finish
7.5''W x 6''H x 6''Ext.
2 x 3 W SSL Dedicated LED (Included)
312 Delivered Lumens
3000K, 80 CRI, 120v
Wet Location
UL (US/Canada) Listed
JA8-2016/Title 24 Listed, Marine Grade
Bi-Directional Light Source with *4 Adjustable Louvers*

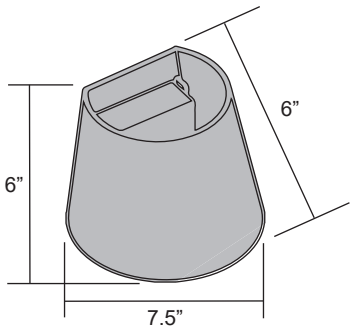

MARINO

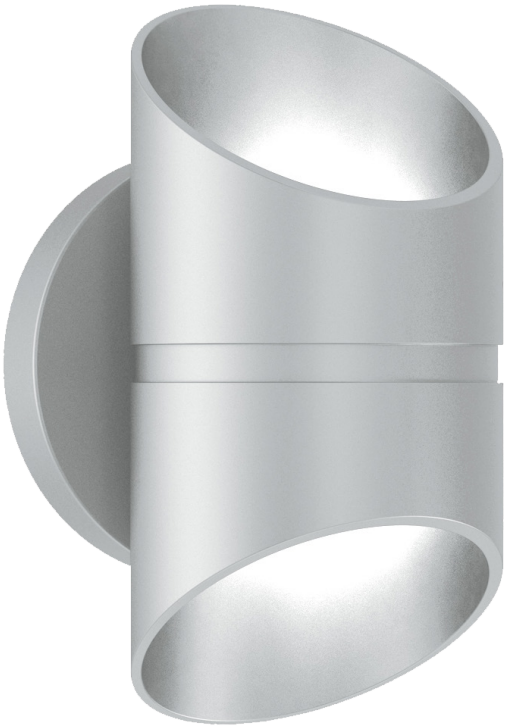

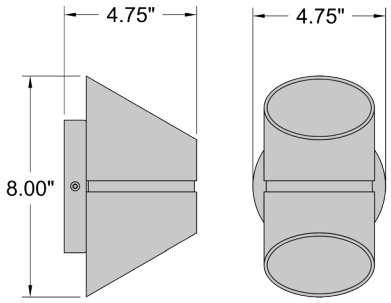

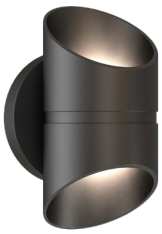

20120LEDDMG-BL
Black Finish

20120LEDDMG-SAT
Bi-Directional Outdoor LED Wall Mount
Satin Finish
4.75''W x 8''H x 4.75''Ext.
2 x 6 W SSL Dedicated LED (Included)
612 Delivered Lumens
3000K, 90 CRI, 120v
Dimmable
Wet Location
ETL (US/Canada) Listed
JA8-2016/Title 24 Listed, Marine Grade

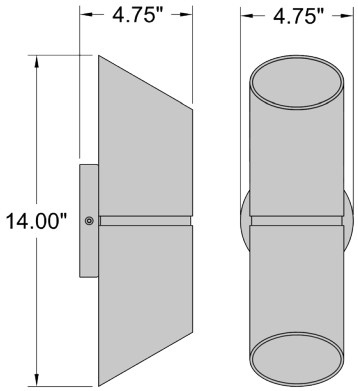

20121LEDDMG-BL

Bi-Directional Outdoor LED Wall Mount

Black Finish
4.75''W x 14''H x 4.75''Ext.
2 x 6 W SSL Dedicated LED (Included)
688 Delivered Lumens
3000K, 90 CRI, 120v
Dimmable
Wet Location
ETL (US/Canada) Listed
JA8-2016/Title 24 Listed, Marine Grade

20121LEDDMG-SAT
Satin Finish

MATIRA

20147LEDDMGLP-BL
Black Finish

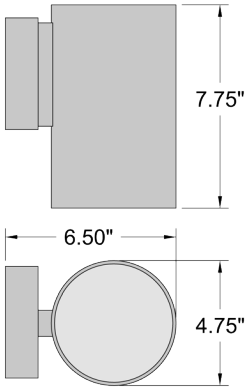

20147LEDDMGLP-SAT
1 Light Outdoor LED Wall Mount
Satin Finish
4.75''W x 7.75''H x 6.5''Ext.
1 x 10 W E-26 Replaceable LED (Included)
800 Nominal Lumens
3000K, 90 CRI, 120v
Dimmable
Wet Location
ETL (US/Canada) Listed
Dark Sky, Marine Grade, Title 20

MATIRA

20148LEDDMGLP-SAT
Satin Finish

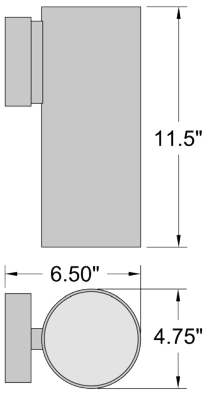

20148LEDDMGLP-BL
1 Light Outdoor LED Wall Mount
Black Finish
4.75''W x 11.5''H x 6.5''Ext.
1 x 10 W E-26 Replaceable LED (Included)
800 Nominal Lumens
3000K, 90 CRI, 120v
Dimmable
Wet Location
ETL (US/Canada) Listed
Dark Sky, Marine Grade, Title 20

MATIRA

20149LEDDMGLP-BL

Bi-Directional Outdoor LED Wall Mount

Black Finish
Frosted
4.75''W x 12.25''H x 6.5''Ext.
2 x 10 W E-26 Replaceable LED (Included)
1600 Nominal Lumens
3000K, 90 CRI, 120v
Dimmable
Wet Location
ETL (US/Canada) Listed
Marine Grade, Title 20

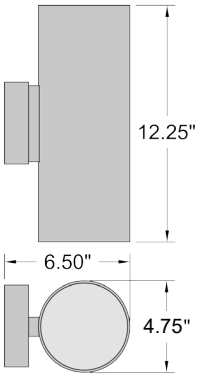

20149LEDDMGLP-SAT
Satin Finish

SANDPIPER

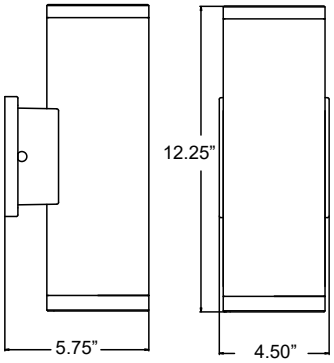

20034LEDMG-BRZ/FST
Bronze Finish

20034LEDMG-SAT/FST
Bi-Directional Outdoor LED Wall Mount
Satin Finish
Frosted Glass
4.5’’DIA. x 12.25’’H x 5.75’’Ext.
2 x 15 W SSL Dedicated LED (Included)
2198 Delivered Lumens
3000K, 90 CRI, 120v
Wet Location
ETL (US/Canada) Listed
JA8-2016/Title 24 Listed, Marine Grade

20035LEDMG-BRZ/FST

Bi-Directional Outdoor LED Wall Mount

Bronze Finish
Frosted Glass
4''DIA. x 18.25''H x 5.75''Ext.
2 x 15 W SSL Dedicated LED (Included)
2198 Delivered Lumens
3000K, 90 CRI, 120v
Wet Location
ETL (US/Canada) Listed
JA8-2016/Title 24 Listed, Marine Grade

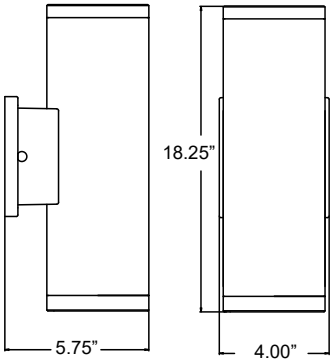

20035LEDMG-SAT/FST
Satin Finish

SANDPIPER

20036LEDMG-BRZ/FST

Bi-Directional Outdoor LED Wall Mount

Bronze Finish
Frosted Glass
6''DIA. x 18''H x 9''Ext.
2 x 15 W SSL Dedicated LED (Included)
2314 Delivered Lumens
3000K, 90 CRI, 120-277v
Dimmable
Wet Location
ETL (US/Canada) Listed
JA8-2016/Title 24 Listed, Marine Grade

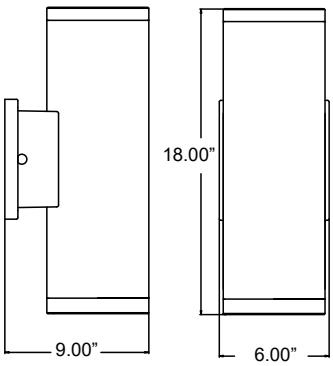

20036LEDMG-SAT/FST
Satin Finish

POSEIDON

20363-BRZ
Bronze Finish

20363-SAT
Satin Finish

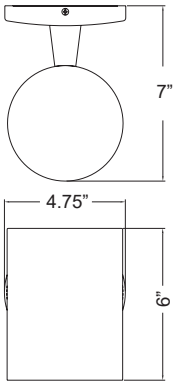

20363-BL
1 Light Outdoor Wall Mount
Black Finish
4.75’’W x 6’’H x 7’’Ext.
1 x 60 W E-26 Incandescent
120v
Dimmable
Wet Location
UL (US/Canada) Listed
Dark Sky

POSEIDON

20363LEDDLP-BL
Black Finish

20363LEDDLP-BRZ
Bronze Finish

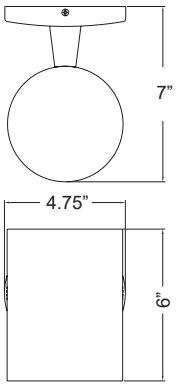

20363LEDDLP-SAT
1 Light Outdoor LED Wall Mount
Satin Finish
4.75’’W x 6’’H x 7’’Ext.
1 x 10 W E-26 Replaceable LED (Included)
800 Nominal Lumens
3000K, 90 CRI, 120v
Dimmable
Wet Location
UL (US/Canada) Listed
Dark Sky, Title 20

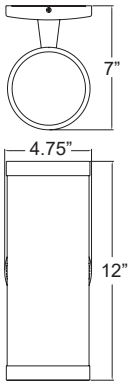

20364-BRZ/CLR

Bi-Directional Outdoor LED Wall Mount

Bronze Finish
Clear Glass
4.75’’W x 12’’H x 7’’Ext.
2 x 60 W E-26 Incandescent
120v
Dimmable
Wet Location
UL (US/Canada) Listed

20364-SAT/CLR
Satin Finish

POSEIDON

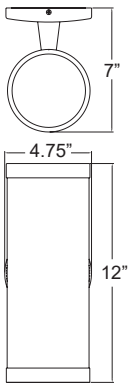

20364LEDDLP-SAT/CLR

Bi-Directional Outdoor LED Wall Mount

Satin Finish
Clear Glass
4.75’’W x 12’’H x 7’’Ext.
2 x 10 W E-26 Replaceable LED (Included)
1600 Nominal Lumens
3000K, 90 CRI, 120v
Dimmable
Wet Location
UL (US/Canada) Listed
Title 20

20364LEDDLP-BRZ/CLR
Bronze Finish

SUNSET

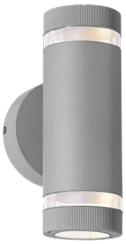

20385MG-SAT/CLR
Satin Finish

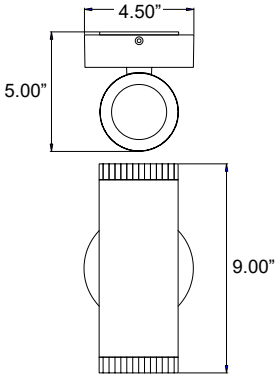

20385MG-BRZ/CLR
Bi-Directional Outdoor LED Wall Mount
Bronze Finish
Clear Glass
4.5''W x 9''H x 5''Ext.
2 x 35 W GU-5.3 Halogen (Included)
720 Nominal Lumens
2900K, 120v
Wet Location
UL (US/Canada) Listed
Marine Grade

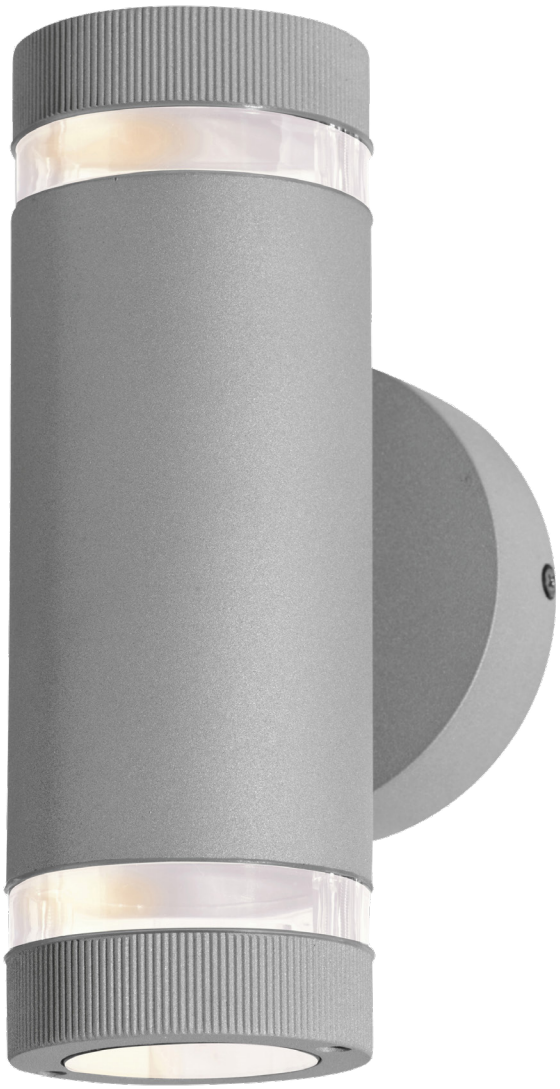

20385LEDMGLP-SAT/CLR

Bi-Directional Outdoor LED Wall Mount

Satin Finish
Clear Glass
4.5''W x 9''H x 5''Ext.
2 x 7 W GU-5.3 Replaceable LED (Included)
900 Nominal Lumens
3000K, 90 CRI, 120v
Dimmable
Wet Location
UL (US/Canada) Listed
JA8-2016/Title 24 Listed, Marine Grade

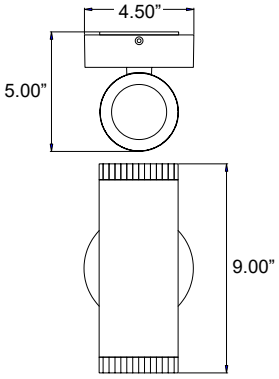

20385LEDMGLP-BRZ/CLR
Bronze Finish

BAYSIDE

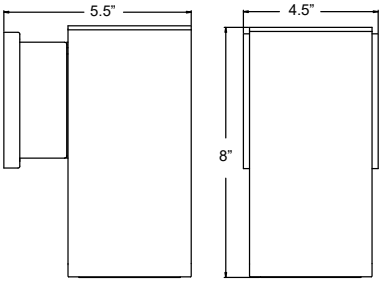

20032LEDMG-SAT/FST
Satin Finish

20032LEDMG-BRZ/FST
Outdoor LED Wall Mount
Bronze Finish
Frosted Glass
4.5''W x 8''H x 5.5''Ext.
1 x 15 W SSL Dedicated LED (Included)
590 Delivered Lumens
3000K, 90 CRI, 120v
Wet Location
ETL (US/Canada) Listed
Dark Sky, JA8-2016/Title 24 Listed, Marine Grade

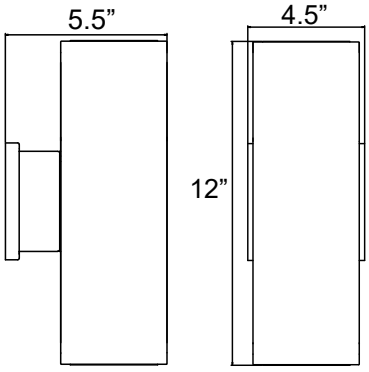

20033LEDMG-SAT/FST

Bi-Directional Outdoor LED Wall Mount

Satin Finish
Frosted Glass
4.5’’W x 12’’H x 5.5’’Ext.
2 x 15 W SSL Dedicated LED (Included)
1352 Delivered Lumens
3000K, 90 CRI, 120v
Wet Location
ETL (US/Canada) Listed
JA8-2016/Title 24 Listed, Marine Grade

20033LEDMG-BRZ/FST
Bronze Finish

HUBERT

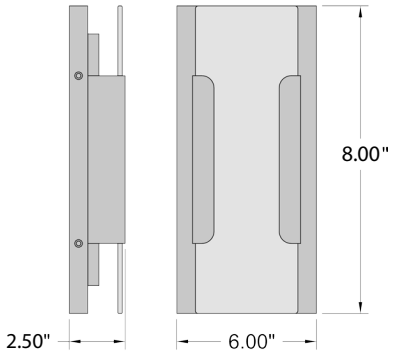

20001LEDDMG-BRZ/SDG

Outdoor LED Wall Mount

Bronze Finish
Seeded Glass
6''W x 8''H x 2.5''Ext.
1 x 8 W SSL Dedicated LED (Included)
220 Delivered Lumens
3000K, 90 CRI, 120v
Dimmable
Wet Location
ETL (US/Canada) Listed
ADA, JA8-2016/Title 24 Listed Listed, Marine Grade

HUBERT

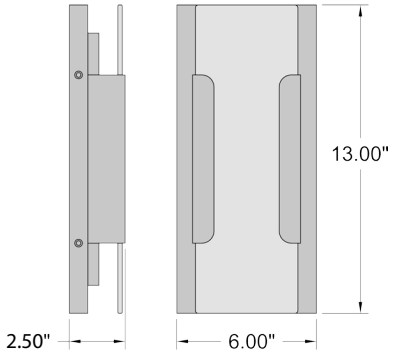

20002LEDDMG-BRZ/SDG

Outdoor LED Wall Mount

Bronze Finish
Seeded Glass
6''W x 13''H x 2.5''Ext.
1 x 10 W SSL Dedicated LED (Included)
323 Delivered Lumens
3000K, 90 CRI, 120v
Dimmable
Wet Location
ETL (US/Canada) Listed
ADA, JA8-2016/Title 24 Listed, Marine Grade

ARTEMIS

20362-SAT/OPL
Satin Finish

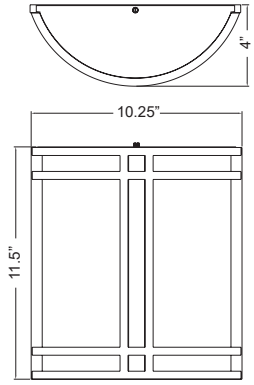

20362-BRZ/OPL
2 Light Outdoor Wall Mount
Bronze Finish
Opal Glass
10.25''W x 11.5''H x 4''Ext.
2 x 60 W E-26 Incandescent
120v
Wet Location
UL (US/Canada) Listed
ADA

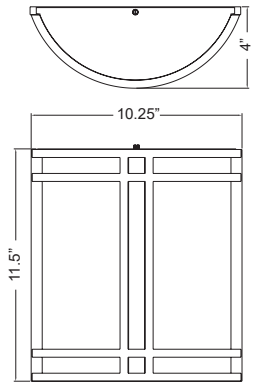

20362LEDDLP-SAT/OPL

2 Light Outdoor LED Wall Mount

Satin Finish
Opal Glass
10.25''W x 11.5''H x 4''Ext.
2 x 10 W E-26 Replaceable LED (Included)
1600 Nominal Lumens
3000K, 90 CRI, 120v
Dimmable
Wet Location
UL (US/Canada) Listed
ADA, JA8-2016/Title 24 Listed,Title 20

20362LEDDLP-BRZ/OPL
Bronze Finish

NEVIS

20011MG-BRZ/RFR
Bronze Finish

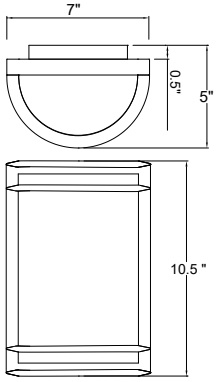

20011MG-SAT/RFR
1 Light Outdoor Wall Mount
Satin Finish
Ribbed Frosted Glass
7''W x 10.5''H x 5''Ext.
1 x 60 W E-26 Incandescent
120v
Dimmable
Wet Location
UL (US/Canada) Listed
Marine Grade

20011LEDDMGLP-BRZ/RFR

1 Light Outdoor LED Wall Mount

Bronze Finish
Ribbed Frosted Glass
7''W x 10.5''H x 5''Ext.
1 x 10 W E-26 Replaceable LED (Included)
800 Nominal Lumens
3000K, 90 CRI, 120v
Dimmable
Wet Location
UL (US/Canada) Listed
JA8-2016/Title 24 Listed Listed, Marine Grade,Title 20

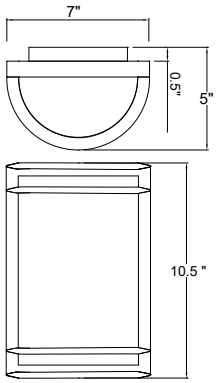

20011LEDDMGLP-SAT/RFR
Satin Finish

NEVIS

20011LEDDMG-SAT/RFR

Outdoor LED Wall Mount

Satin Finish
Ribbed Frosted Glass
7''W x 10.5''H x 5''Ext.
1 x 13 W SSL Dedicated LED (Included)
1250 Nominal Lumens
3000K, 90 CRI, 120v
Dimmable
Wet Location
UL (US/Canada) Listed
JA8-2016/Title 24 Listed Listed, Marine Grade

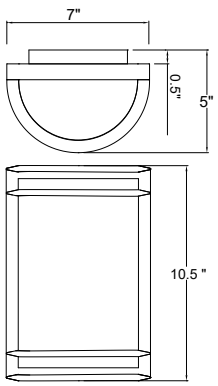

20011LEDDMG-BRZ/RFR
Bronze Finish

NEVIS

20031MG-BRZ/RFR
Bronze Finish

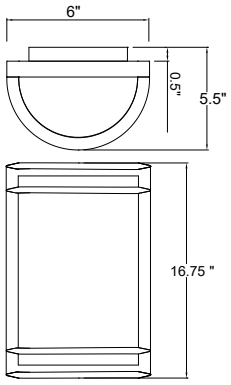

20031MG-SAT/RFR
2 Light Outdoor Wall Mount
Satin Finish
Ribbed Frosted Glass
6''W x 16.75''H x 5.5''Ext.
2 x 60 W E-26 Incandescent
120v
Dimmable
Wet Location
UL (US/Canada) Listed
Marine Grade

NEVIS

20031LEDDMGLP-BRZ/RFR
Bronze Finish

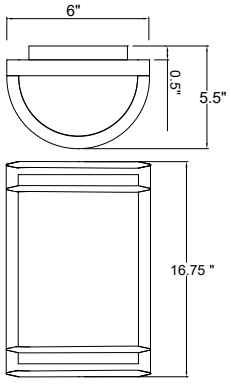

20031LEDDMGLP-SAT/RFR
2 Light Outdoor LED Wall Mount
Satin Finish
Ribbed Frosted Glass
6''W x 16.75''H x 5.5''Ext.
2 x 10 W E-26 Replaceable LED (Included)
1600 Nominal Lumens
3000K, 90 CRI, 120v
Dimmable
Wet Location
UL (US/Canada) Listed
JA8-2016/Title 24 Listed, Marine Grade, Title 20

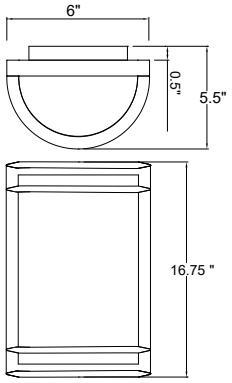

20031LEDDMG-BRZ/RFR

Outdoor LED Wall Mount

Bronze Finish
Ribbed Frosted Glass
6''W x 16.75''H x 5.5''Ext.
1 x 15 W SSL Dedicated LED (Included)
1500 Nominal Lumens
3000K, 90 CRI, 120v
Dimmable
Wet Location
UL (US/Canada) Listed
Energy Star, JA8-2016/Title 24 Listed, Marine Grade

20031LEDDMG-SAT/RFR
Satin Finish

BERMUDA

20010MG-BL/RFR
Black Finish

20010MG-BRZ/RFR
Bronze Finish

20010MG-SAT/RFR
Satin Finish

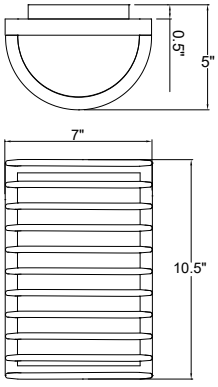

20010MG-WH/RFR
1 Light Outdoor Wall Mount
White Finish
Ribbed Frosted Glass
7''W x 10.5''H x 5''Ext.
1 x 60 W E-26 Incandescent
120v
Dimmable
Wet Location
UL (US/Canada) Listed
Marine Grade

20010LEDDMGLP-BL/RFR

1 Light Outdoor LED Wall Mount

Black Finish
Ribbed Frosted Glass
7''W x 10.5''H x 5''Ext.
1 x 10 W E-26 Replaceable LED (Included)
800 Nominal Lumens
3000K, 80 CRI, 120v
Dimmable
Wet Location
UL (US/Canada) Listed
JA8-2016/Title 24 Listed Listed, Marine Grade, Title 20

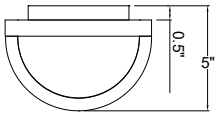

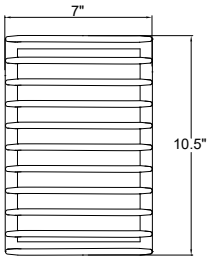

20010LEDDMGLP-BRZ/RFR
Bronze Finish

20010LEDDMGLP-SAT/RFR
Satin Finish

20010LEDDMGLP-WH/RFR
White Finish

BERMUDA

20010LEDDMG-WH/RFR

Outdoor LED Wall Mount

White Finish
Ribbed Frosted Glass
7''W x 10.5''H x 5''Ext.
1 x 13 W SSL Dedicated LED (Included)
1265 Nominal Lumens
3000K, 90 CRI, 120v
Dimmable
Wet Location
UL (US/Canada) Listed
JA8-2016/Title 24 Listed Listed, Marine Grade

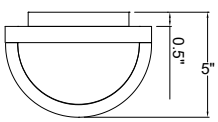

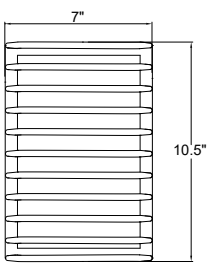

20010LEDDMG-BL/RFR
Black Finish

20010LEDDMG-BRZ/RFR
Bronze Finish

20010LEDDMG-SAT/RFR
Satin Finish

BERMUDA

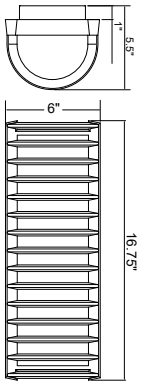

20030LEDDMGLP-BRZ/RFR
Bronze Finish

20030LEDDMGLP-SAT/RFR
2 Light Outdoor LED Wall Mount
Satin Finish
Ribbed Frosted Glass
6''W x 16.75''H x 5.5''Ext.
2 x 10 W E-26 Replaceable LED (Included)
1600 Nominal Lumens
3000K, 90 CRI, 120v
Dimmable
Wet Location
UL (US/Canada) Listed
JA8-2016/Title 24 Listed, Marine Grade, Title 20

BERMUDA

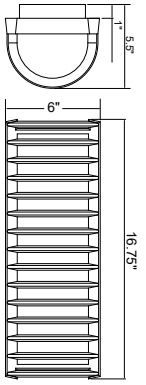

20030MG-SAT/RFR
Satin Finish

20030MG-BRZ/RFR
2 Light Outdoor Wall Mount
Bronze Finish
Ribbed Frosted Glass
6''W x 16.75''H x 5.5''Ext.
2 x 60 W E-26 Incandescent
120v
Dimmable
Wet Location
UL (US/Canada) Listed
Marine Grade

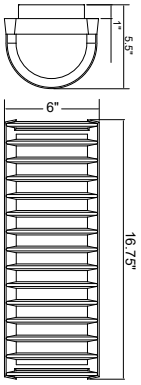

20030LEDDMG-BRZ/RFR

Outdoor LED Wall Mount

Bronze Finish
Ribbed Frosted Glass
6''W x 16.75''H x 5.5''Ext.
1 x 15 W SSL Dedicated LED (Included)
1500 Nominal Lumens
3000K, 90 CRI, 120v
Dimmable
Wet Location
UL (US/Canada) Listed
JA8-2016/Title 24 Listed, Marine Grade

20030LEDDMG-SAT/RFR
Satin Finish

CILINDRO

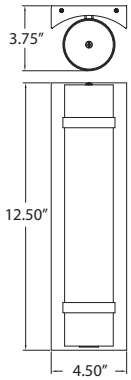

20067LEDD-BS/OPL

Outdoor LED Wall Mount

Brushed Steel Finish
Opal Glass
4.5''W x 12.5''H x 3.75''Ext.
1 x 8 W SSL Dedicated LED (Included)
640 Nominal Lumens
3000K, 90 CRI, 120v
Dimmable
Wet Location
UL (US/Canada) Listed
ADA, JA8-2016/Title 24 Listed

CILINDRO

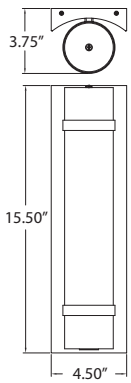

20068LEDD-BS/OPL

Outdoor LED Wall Mount

Brushed Steel Finish
Opal Glass
4.5''W x 15.5''H x 3.75''Ext.
1 x 12 W SSL Dedicated LED (Included)
960 Nominal Lumens
3000K, 90 CRI, 120v
Dimmable
Wet Location
UL (US/Canada) Listed
ADA, JA8-2016/Title 24 Listed

20069LEDD-BS/OPL

Outdoor LED Wall Mount

Brushed Steel Finish
Opal Glass
4.5''W x 18.5''H x 3.75''Ext.
1 x 16 W SSL Dedicated LED (Included)
1280 Nominal Lumens
3000K, 90 CRI, 120v
Dimmable
Wet Location
UL (US/Canada) Listed
ADA, JA8-2016/Title 24 Listed

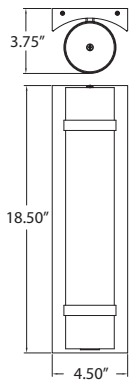

COVE

20105LEDMG-SAT/ACR
Satin Finish

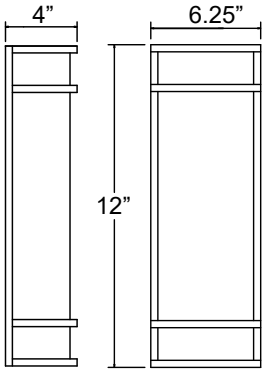

20105LEDMG-BRZ/ACR
Dual Voltage Outdoor LED Wall Mount
Bronze Finish
Acrylic Lens
6.25’’W x 12’’H x 4’’Ext.
1 x 15 W SSL Dedicated LED (Included)
596 Delivered Lumens
3000K, 90 CRI, 120-277v
Wet Location
ETL (US/Canada) Listed
ADA, JA8-2016/Title 24 Listed, Marine Grade

COVE

20106LEDMG-BRZ/ACR
Bronze Finish

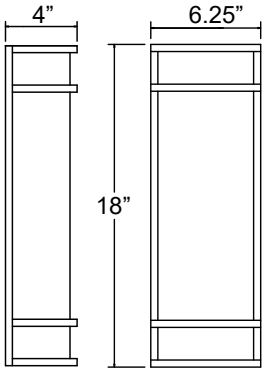

20106LEDMG-SAT/ACR
Dual Voltage Outdoor LED Wall Mount
Satin Finish
Acrylic Lens
6.25’’W x 18’’H x 4’’Ext.
1 x 20 W SSL Dedicated LED (Included)
1153 Delivered Lumens
3000K, 90 CRI, 120-277v
Wet Location
ETL (US/Canada) Listed
ADA, JA8-2016/Title 24 Listed, Marine Grade

20107LEDMG-BRZ/ACR

Dual Voltage Outdoor LED Wall Mount

Bronze Finish
Acrylic Lens
6.25''W x 24''H x 4''Ext.
1 x 23 W SSL Dedicated LED (Included)
1158 Delivered Lumens
3000K, 90 CRI, 120-277v
Wet Location
ETL (US/Canada) Listed
ADA, JA8-2016/Title 24 Listed, Marine Grade

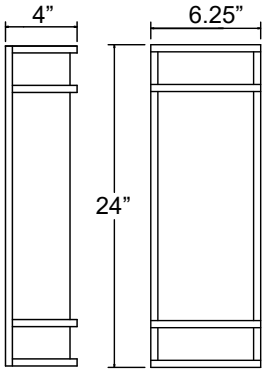

20107LEDMG-SAT/ACR
Satin Finish

COVE

20108LEDMG-BRZ/ACR

Dual Voltage Outdoor LED Wall Mount

Bronze Finish
Acrylic Lens
6.25''W x 30''H x 4''Ext.
1 x 28 W SSL Dedicated LED (Included)
1195 Delivered Lumens
3000K, 90 CRI, 120-277v
Wet Location
ETL (US/Canada) Listed
ADA, JA8-2016/Title 24 Listed, Marine Grade

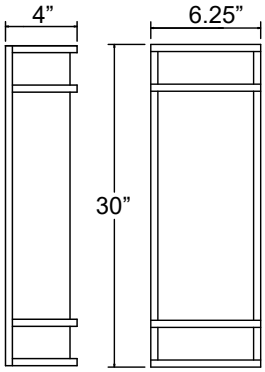

20108LEDMG-SAT/ACR
Satin Finish

MARGATE

20110LEDDMG-BL/ACR

Outdoor LED Wall Mount

Black Finish
Acrylic Lens
5''W x 10.25''H x 4.5''Ext.
1 x 12 W SSL Dedicated LED (Included)
580 Delivered Lumens
3000K, 90 CRI, 120v
Dimmable
Wet Location
UL (US/Canada) Listed
JA8-2016/Title 24 Listed, Marine Grade

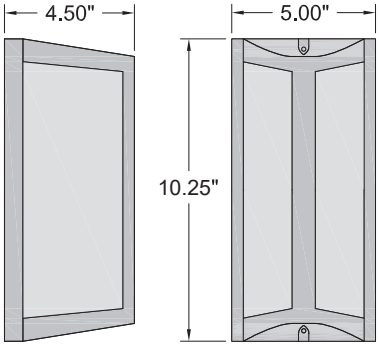

20110LEDDMG-SAT/ACR
Satin Finish

TUXEDO

20100LEDDMG-SAT/ACR
Satin Finish

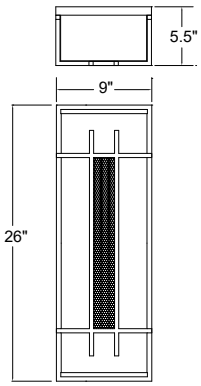

20100LEDDMG-BRZ/ACR
Outdoor LED Wall Mount
Bronze Finish
Acrylic Lens
9''W x 26''H x 5.5''Ext.
1 x 25 W SSL Dedicated LED (Included)
2693 Nominal Lumens
3000K, 90 CRI, 120v
Dimmable
Wet Location
ETL (US/Canada) Listed
JA8-2016/Title 24 Listed, Marine Grade

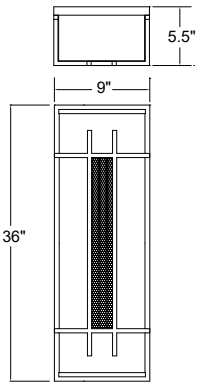

20101LEDDMG-SAT/ACR

Outdoor LED Wall Mount

Satin Finish
Acrylic Lens
9''W x 36''H x 5.5''Ext.
1 x 30 W SSL Dedicated LED (Included)
3326 Nominal Lumens
3000K, 90 CRI, 120v
Dimmable
Wet Location
ETL (US/Canada) Listed
JA8-2016/Title 24 Listed, Marine Grade

20101LEDDMG-BRZ/ACR
Bronze Finish

MONTREAL

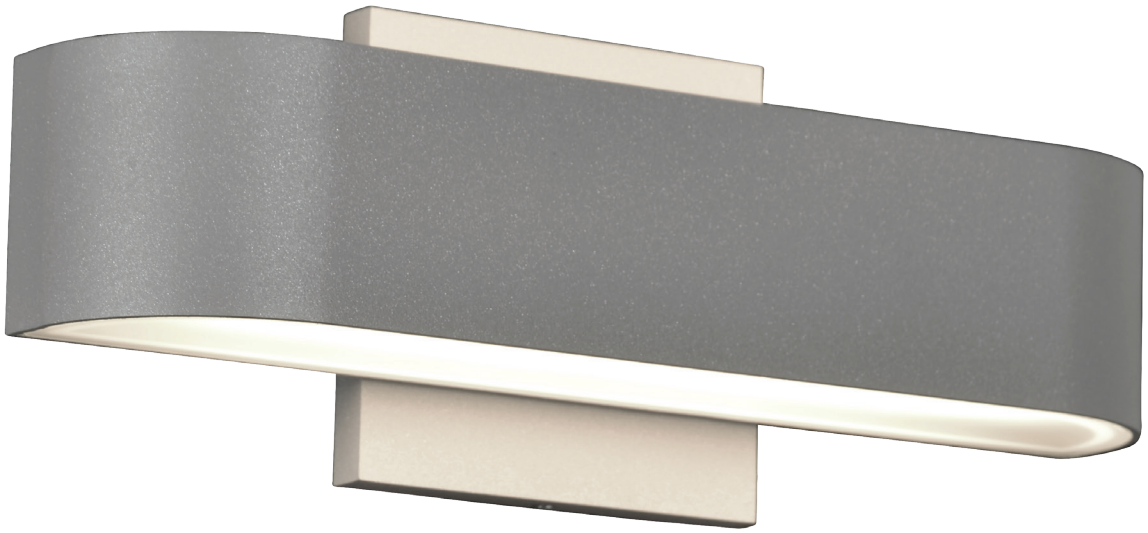

20046LEDDMG-BL/FST
Black Finish

20046LEDDMG-BRZ/FST
Bronze Finish

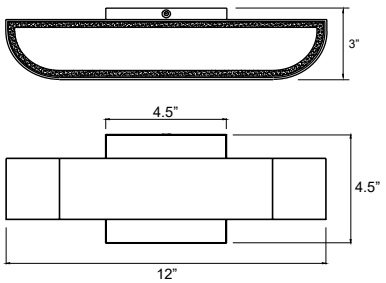

20046LEDDMG-SAT/FST
Bi-Directional Outdoor LED Wall Mount
Satin Finish
Frosted Glass
12''W x 4.5''H x 3''Ext.
2 x 13.5 W SSL Dedicated LED (Included)
963 Delivered Lumens
3000K, 90 CRI, 120v
Dimmable
Wet Location
UL (US/Canada) Listed
ADA, JA8-2016/Title 24 Listed, Marine Grade

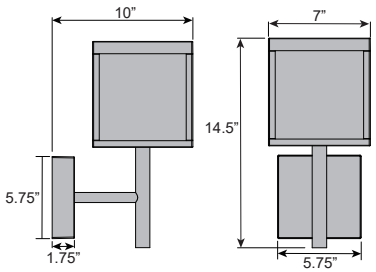

20080LED-BL/CLR

Dual Voltage Outdoor LED Wall Mount

Black Finish
Clear Glass
7''W x 14.5''H x 10''Ext.
1 x 13 W SSL Dedicated LED (Included)
837 Delivered Lumens
3000K, 90 CRI, 120-277v
Wet Location
ETL (US/Canada) Listed
JA8-2016/Title 24 Listed, Marine Grade

REVEAL

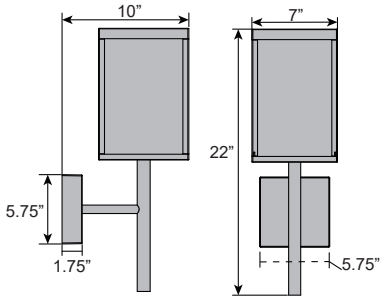

20081LED-BL/CLR

Dual Voltage Outdoor LED Wall Mount

Black Finish
Clear Glass
7’’W x 22’’H x 10’’Ext.
1 x 13 W SSL Dedicated LED (Included)
875 Delivered Lumens
3000K, 90 CRI, 120-277v
Wet Location
ETL (US/Canada) Listed
JA8-2016/Title 24 Listed, Marine Grade

REVEAL

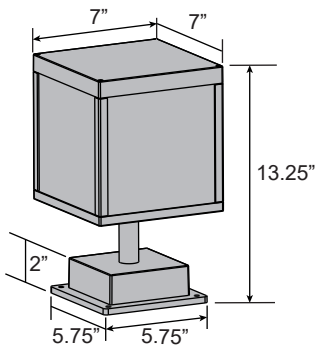

20082LED-BL/CLR

Dual Voltage Outdoor LED Pier Mount

Black Finish
Clear Glass
7’’L x 7’’W x 13.25’’H
1 x 13 W SSL Dedicated LED (Included)
850 Delivered Lumens
3000K, 90 CRI, 120-277v
Wet Location
ETL (US/Canada) Listed
JA8-2016/Title 24 Listed, Marine Grade

REVEAL

20083LED-BL/CLR

Dual Voltage Outdoor LED Pier Mount

Black Finish
Clear Glass
7''L x 7''W x 15''H
1 x 13 W SSL Dedicated LED (Included)
850 Delivered Lumens
3000K, 90 CRI, 120-277v
Wet Location
ETL (US/Canada) Listed
JA8-2016/Title 24 Listed, Marine Grade

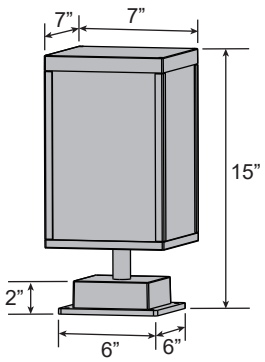

REVEAL

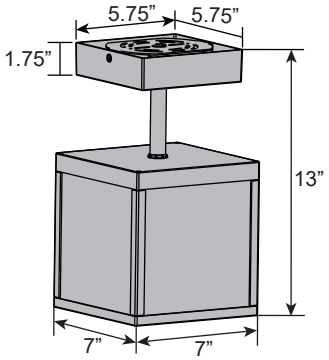

20084LED-BL/CLR

Dual Voltage Outdoor LED Semi Flush

Black Finish
Clear Glass
7’’L x 7’’W x 13’’H
1 x 13 W SSL Dedicated LED (Included)
850 Delivered Lumens
3000K, 90 CRI, 120-277v
Wet Location
ETL (US/Canada) Listed
JA8-2016/Title 24 Listed, Marine Grade

Bluetooth® SPEAKER

20086LEDD-BL/CLR

Portable LED Lantern with Bluetooth Speaker

Black Finish
Clear Glass
7.25''L x 7.25''W x 11.5''H
1 x 4 W SSL Dedicated LED (Included)
300 Nominal Lumens
3000K, 80
Wet Location
ETL (US/Canada) Listed
Micro USB Cable Included for Charging

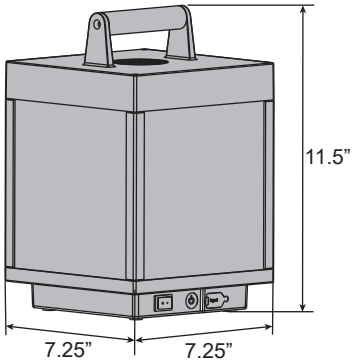

Micro USB
Connection for Charging

20125LEDDMG-ORB/OPL

Outdoor LED Wall Mount

Oil Rubbed Bronze Finish
Opal Glass
4.75''W x 10''H x 4.5''Ext.
1 x 8 W SSL Dedicated LED (Included)
720 Nominal Lumens
3000K, 90 CRI, 120v
Dimmable
Wet Location
UL (US/Canada) Listed
JA8-2016/Title 24 Listed, Marine Grade

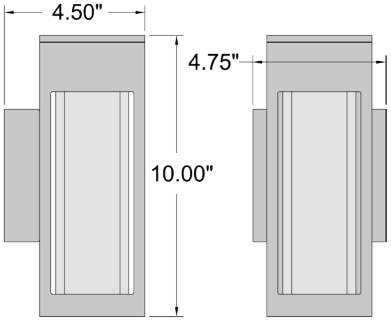

SOLL

20126LEDDMG-ORB/OPL

Outdoor LED Wall Mount

Oil Rubbed Bronze Finish
Opal Glass
4.75''W x 14''H x 4.5''Ext.
1 x 12 W SSL Dedicated LED (Included)
1100 Nominal Lumens
3000K, 90 CRI, 120v
Dimmable
Wet Location
UL (US/Canada) Listed
JA8-2016/Title 24 Listed, Marine Grade

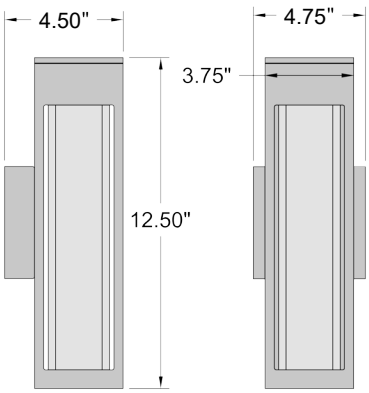

CLIFTON

20260LEDDMG-BL/OPL
Black Finish

20260LEDDMG-WH/OPL
White Finish

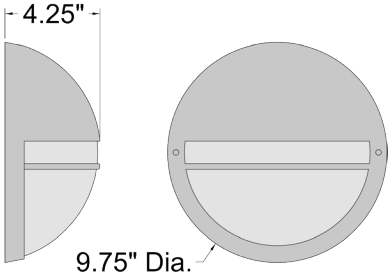

20260LEDDMG-SAT/OPL
Outdoor LED Bulkhead
Satin Finish
Opal Glass
9.75''DIA. x 4.25''Ext.
1 x 12 W SSL Dedicated LED (Included)
511 Delivered Lumens
3000K, 90 CRI, 120v
Dimmable
Wet Location
ETL (US/Canada) Listed
JA8-2016/Title 24 Listed, Marine Grade

20270LEDDMG-BL/OPL
Black Finish

20270LEDDMG-WH/OPL

Outdoor LED Bulkhead

White Finish
Opal Glass
8.5''W x 5.25''H x 4''Ext.
1 x 9 W SSL Dedicated LED (Included)
391 Delivered Lumens
3000K, 90 CRI, 120v
Dimmable
Wet Location
ETL (US/Canada) Listed
ADA, JA8-2016/Title 24 Listed, Marine Grade

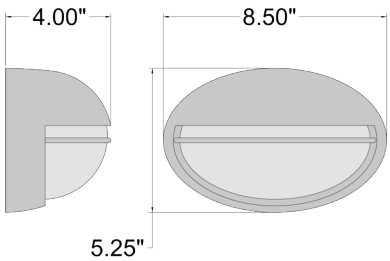

20270LEDDMG-SAT/OPL
Satin Finish

CABO

20280LEDDMG-SAT/OPL
Satin Finish

20280LEDDMG-WH/OPL
White Finish

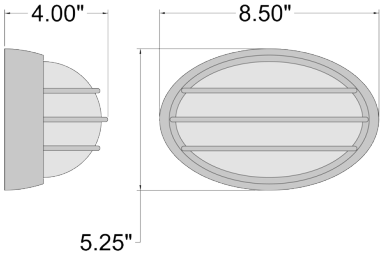

20280LEDDMG-BL/OPL
Outdoor LED Bulkhead
Black Finish
Opal Glass
8.5''W x 5.25''H x 4''Ext.
1 x 9 W SSL Dedicated LED (Included)
429 Delivered Lumens
3000K, 90 CRI, 120v
Dimmable
Wet Location
ETL (US/Canada) Listed
ADA, JA8-2016/Title 24 Listed, Marine Grade

NAUTICUS

20294-BL/FST
Black Finish

20294-SAT/FST
Satin Finish

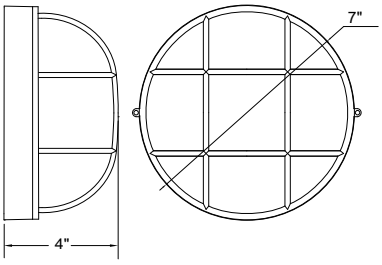

20294-WH/FST
1 Light Outdoor Bulkhead
White Finish
Frosted Glass
7''DIA. x x 4''Ext.
1 x 60 W E-26 Incandescent
120v
Dimmable
Wet Location
UL (US/Canada) Listed
ADA

NAUTICUS

20294LEDDLP-SAT/FST
Satin Finish

20294LEDDLP-WH/FST
White Finish

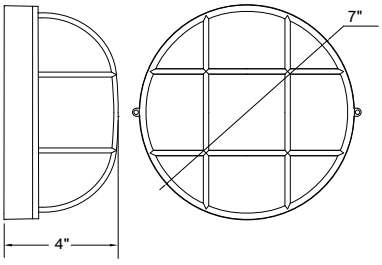

20294LEDDLP-BL/FST
1 Light Outdoor LED Bulkhead
Black Finish
Frosted Glass
7''DIA. x x 4''Ext.
1 x 9 W E-26 Replaceable LED (Included)
800 Nominal Lumens
3000K, 90 CRI, 120v
Dimmable
Wet Location
UL (US/Canada) Listed
ADA, JA8-2016/Title 24 Listed, Title 20

20296-WH/FST
White Finish

20296-SAT/FST

1 Light Outdoor Bulkhead
Satin Finish
Frosted Glass
9.5''DIA. x x 5''Ext.
1 x 100 W E-26 Incandescent
120v
Dimmable
Wet Location
UL (US/Canada) Listed

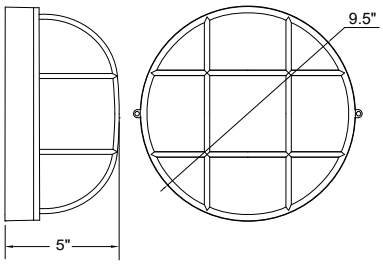

20296-BL/FST
Black Finish

NAUTICUS

20296LEDDLP-SAT/FST
Satin Finish

20296LEDDLP-BL/FST

1 Light Outdoor LED Bulkhead
Black Finish
Frosted Glass
9.5''DIA. x x 5''Ext.
1 x 10 W E-26 Replaceable LED (Included)
800 Nominal Lumens
3000K, 80 CRI, 120v
Dimmable
Wet Location
UL (US/Canada) Listed
JA8-2016/Title 24 Listed, Title 20

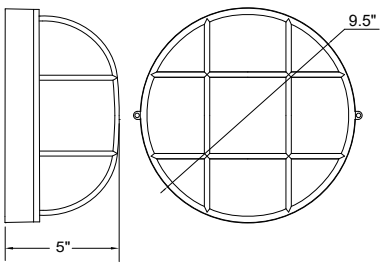

20296LEDDLP-WH/FST
White Finish

NAUTICUS

20292-SAT/FST
Satin Finish

20292-WH/FST
White Finish

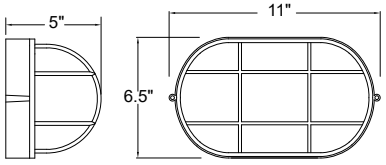

20292-BL/FST
1 Light Outdoor Bulkhead
Black Finish
Frosted Glass
11''W x 6.5''H x 5''Ext.
1 x 100 W E-26 Incandescent
120v
Dimmable
Wet Location
UL (US/Canada) Listed

NAUTICUS

20292LEDDLP-BL/FST
Black Finish

20292LEDDLP-WH/FST
White Finish

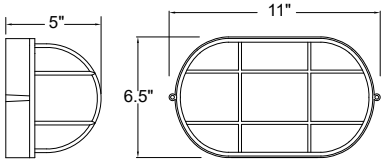

20292LEDDLP-SAT/FST
1 light Outdoor LED Bulkhead
Satin Finish
Frosted Glass
11''W x 6.5''H x 5''Ext.
1 x 10 W E-26 Replaceable LED (Included)
800 Nominal Lumens
3000K, 90 CRI, 120v
Dimmable
Wet Location
UL (US/Canada) Listed
JA8-2016/Title 24 Listed, Title 20

20290-BL/FST
Black Finish

20290-WH/FST

1 Light Outdoor Bulkhead
White Finish
Frosted Glass
8.25''L x 4.25''H x 3.5''Ext.
1 x 60 W E-26 Incandescent
120v
Dimmable
Wet Location
UL (US/Canada) Listed
ADA

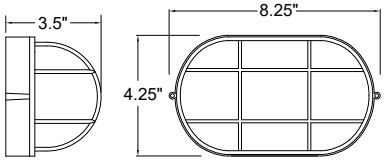

20290-SAT/FST
Satin Finish

NAUTICUS

20290LEDDLP-BL/FST
Black Finish

20290LEDDLP-SAT/FST

1 Light Outdoor LED Bulkhead
Satin Finish
Frosted Glass
8.25''L x 4.25''H x 3.5''Ext.
1 x 10 W E-26 Replaceable LED (Included)
800 Nominal Lumens
3000K, 90 CRI, 120v
Dimmable
Wet Location
UL (US/Canada) Listed
ADA, JA8-2016/Title 24 Listed, Title 20

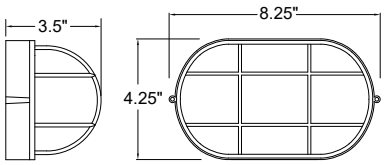

20290LEDDLP-WH/FST
White Finish

NAUTICUS

20291-SAT/FST
Satin Finish

20291-WH/FST
White Finish

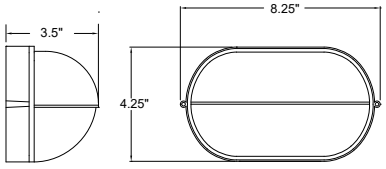

20291-BL/FST
1 Light Outdoor Bulkhead
Black Finish
Frosted Glass
8.25''W x 4.25''H x 3.5''Ext.
1 x 60 W E-26 Incandescent
120v
Dimmable
Wet Location
UL (US/Canada) Listed
ADA

NAUTICUS

20291LEDDLP-BL/FST
Black Finish

20291LEDDLP-SAT/FST
Satin Finish

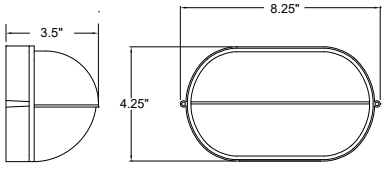

20291LEDDLP-WH/FST
1 Light Outdoor LED Bulkhead
White Finish
Frosted Glass
8.25''W x 4.25''H x 3.5''Ext.
1 x 10 W E-26 Replaceable LED (Included)
800 Nominal Lumens
3000K, 90 CRI, 120v
Dimmable
Wet Location
UL (US/Canada) Listed
ADA, JA8-2016/Title 24 Listed, Title 20

NYMPH

20375MG-BRZ/FST

1 Light Outdoor Wall Mount

Bronze Finish
Frosted Glass
6.75''DIA. x 4''Ext.
1 x 13 W GU-24 Fluorescent (Included)
900 Nominal Lumens
2700K, 120v
Wet Location
ETL (US/Canada) Listed
ADA, Marine Grade

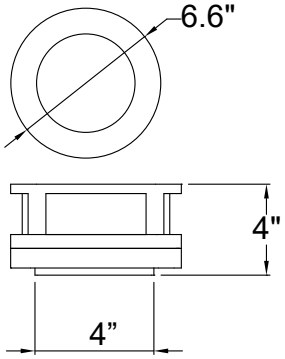

20375MG-SAT/FST
Satin Finish

NYMPH

20375LEDMGLP-SAT/FST

1 Light Outdoor LED Wall Mount

Satin Finish
Frosted Glass
6.75''DIA. x 4''Ext.
1 x 10 W GU-24 Replaceable LED (Included)
900 Nominal Lumens
3000K, 85 CRI, 120v
Wet Location
ETL (US/Canada) Listed
ADA, Marine Grade

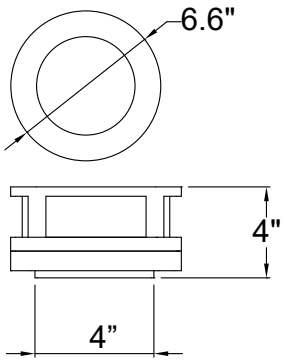

20375LEDMGLP-BRZ/FST
Bronze Finish

BRICK

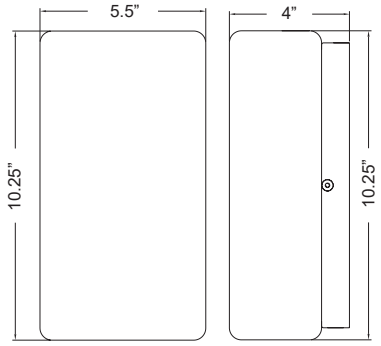

20450-0PL

1 Light Outdoor Wall Mount

Opal Glass
5.5’’W x 10.25’’H x 4’’Ext.
1 x 75 W E-26 Incandescent
120v
Dimmable
Wet Location
UL (US/Canada) Listed
ADA

BRICK

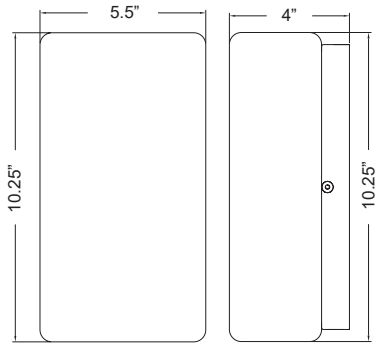

20450LEDDLP-0PL

1 Light Outdoor LED Wall Mount

Opal Glass
5.5’’W x 10.25’’H x 4’’Ext.
1 x 10 W E-26 Replaceable LED (Included)
800 Nominal Lumens
3000K, 90 CRI, 120v
Dimmable
Wet Location
UL (US/Canada) Listed
ADA, JA8-2016/Title 24 Listed, Title 20

20356LEDDMGLP-MBL/FST

2 Light Outdoor LED Flush Mount

Matte Black Finish
Frosted Glass
15.75''DIA. x 5.5''Ext.
2 x 10 W E-26 Replaceable LED (Included)
1600 Nominal Lumens
3000K, 90 CRI, 120v
Dimmable
Wet Location
ETL (US/Canada) Listed
Marine Grade, JA8-2016/Title 24 Listed, Title 20

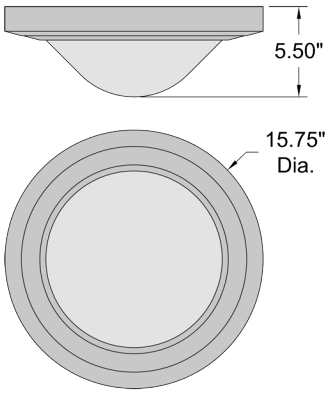

20356LEDDMGLP-SAT/FST
Satin Finish

ULKO

20075LEDD-BRZ/ACR
Bronze Finish

20075LEDD-SILV/ACR
Silver Finish

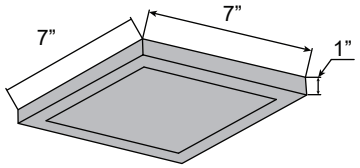

20075LEDD-WH/ACR
Outdoor LED Flush Mount
White Finish
Acrylic Lens
7’’L x 7’’W x 1’’H
1 x 15 W SSL Dedicated LED (Included)
1134 Delivered Lumens
3000K, 90 CRI, 120v
Dimmable
Wet Location
ETL (US/Canada) Listed
JA8-2016/Title 24 Listed

20076LEDD-BRZ/ACR
Bronze Finish

20076LEDD-SILV/ACR

Outdoor LED Flush Mount

Silver Finish
Acrylic Lens
9''L x 9''W x 1''H
1 x 20 W SSL Dedicated LED (Included)
1349 Delivered Lumens
3000K, 90 CRI, 120v
Dimmable
Wet Location
ETL (US/Canada) Listed
JA8-2016/Title 24 Listed

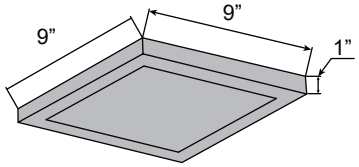

20076LEDD-WH/ACR
White Finish

ULKO

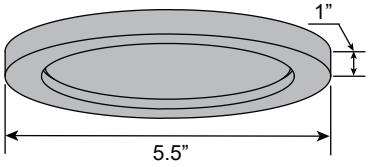

20070LEDD-SILV/ACR
Outdoor LED Flush Mount
Silver Finish
Acrylic Lens
5.5’’DIA. x 1’’H
1 x 11 W SSL Dedicated LED (Included)
580 Delivered Lumens
3000K, 90 CRI, 120v
Dimmable
Wet Location
ETL (US/Canada) Listed
JA8-2016/Title 24 Listed

20070LEDD-WH/ACR
White Finish

ULKO

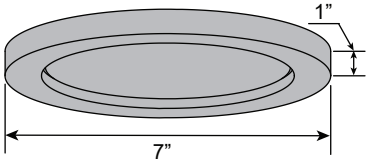

20071LEDD-BRZ/ACR
Bronze Finish

20071LEDD-SILV/ACR
Outdoor LED Flush Mount
Silver Finish
Acrylic Lens
7’’DIA. x 1’’H
1 x 14 W SSL Dedicated LED (Included)
1056 Delivered Lumens
3000K, 90 CRI, 120v
Dimmable
Wet Location
ETL (US/Canada) Listed
JA8-2016/Title 24 Listed

20071LEDD-WH/ACR
White Finish

20072LEDD-BRZ/ACR
Bronze Finish

20072LEDD-SILV/ACR

Outdoor LED Flush Mount

Silver Finish
Acrylic Lens
9''DIA. x 1''H
1 x 19 W SSL Dedicated LED (Included)
1343 Delivered Lumens
3000K, 90 CRI, 120v
Dimmable
Wet Location
ETL (US/Canada) Listed
JA8-2016/Title 24 Listed

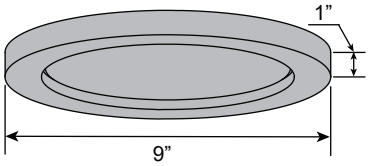

20072LEDD-WH/ACR
White Finish

20791LEDD-SILV/ACR
Silver Finish

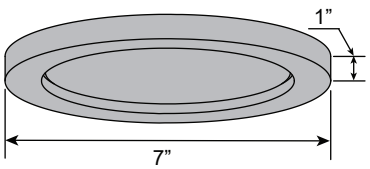

20791LEDD-WH/ACR
Dual Voltage Outdoor LED Flush Mount
White Finish
Acrylic Lens
7’’DIA. x 1’’H
1 x 15 W SSL Dedicated LED (Included)
900 Delivered Lumens
3000K, 90 CRI, 120-277v
0-10v Dimmable
Wet Location
ETL (US/Canada) Listed
Energy Star, JA8-2016/Title 24 Listed

20792LEDD-SILV/ACR

Dual Voltage Outdoor LED Flush Mount

Silver Finish
Acrylic Lens
9''DIA. x 1''H
1 x 20 W SSL Dedicated LED (Included)
1200 Delivered Lumens
3000K, 90 CRI, 120-277v
0-10v Dimmable
Wet Location
ETL (US/Canada) Listed
Energy Star, JA8-2016/Title 24 Listed

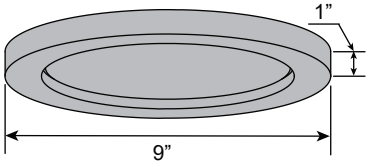

20792LEDD-WH/ACR
White Finish

ULKO

20794LEDD-BRZ/ACR

Dual Voltage Outdoor LED Flush Mount

Bronze Finish
Acrylic Lens
9''L x 9''W x 1''H
1 x 20 W SSL Dedicated LED (Included)
1200 Delivered Lumens
3000K, 90 CRI, 120-277v
0-10v Dimmable
Wet Location
ETL (US/Canada) Listed
Energy Star, JA8-2016/Title 24 Listed

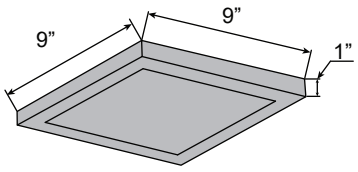

MYRA

23025MG-SILV/CLR
Silver Finish

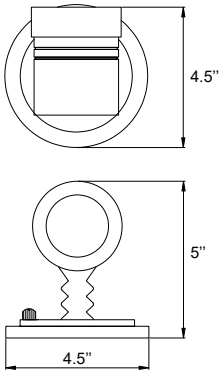

23025MG-BRZ/CLR
Outdoor Adjustable Spotlight
Bronze Finish
Clear Glass
4.5''W x 2.75''DIA. x 4.5''H x 5''Ext.
1 x 50 W GU-10 Halogen
120v
Dimmable
Wet Location
UL (US/Canada) Listed
Marine Grade

MYRA

23025LEDMGLP-BRZ/CLR
Bronze Finish

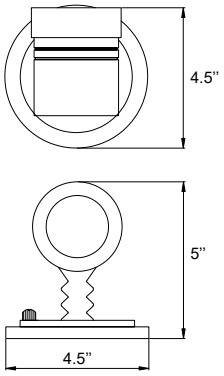

23025LEDMGLP-SILV/CLR
Outdoor Adjustable LED Spotlight
Silver Finish
Clear Glass
4.5''W x 2.75''DIA. x 4.5''H x 5''Ext.
1 x 5.3 W GU-10 Replaceable LED (Included)
380 Nominal Lumens
3000K, 80 CRI, 120v
Wet Location
UL (US/Canada) Listed
Marine Grade, Title 20

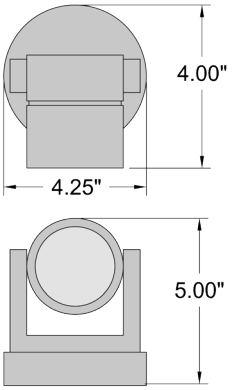

20351LEDDMGLP-SAT/CLR

Outdoor Adjustable LED Spotlight

Satin Finish
Clear Glass
4.25''W x 4''H x 5''Ext.
1 x 5.3 W GU-10 Replaceable LED (Included)
380 Nominal Lumens
3000K, 80 CRI, 120v
Dimmable
Wet Location
UL (US/Canada) Listed
Marine Grade, Title 20

20351LEDDMGLP-BRZ/CLR

Bronze Finish

20350MG-BRZ/CLR

1 Light Outdoor Spotlight

Bronze Finish
Clear Glass
4.25''W x 4.25''H x 4''Ext.
1 x 35 W GU-10 Halogen (Included)
120v
Dimmable
Wet Location
UL (US/Canada) Listed
ADA, Marine Grade
Can be Mounted Bulb Up or Bulb Down

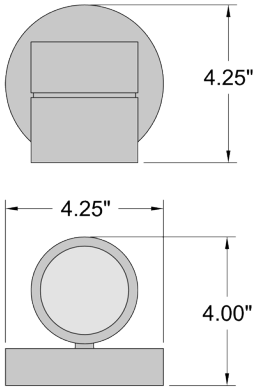

20350MG-SAT/CLR
Satin Finish

KO

20350LEDDMGLP-SAT/CLR

1 Light Outdoor LED Spotlight

Satin Finish
Clear Glass
4.25''W x 4.25''H x 4''Ext.
1 x 5.3 W GU-10 Replaceable LED (Included)
346 Nominal Lumens
3000K, 80 CRI, 120v
Dimmable
Wet Location
UL (US/Canada) Listed
ADA, Marine Grade, Title 20
Can be Mounted Bulb Up or Bulb Down

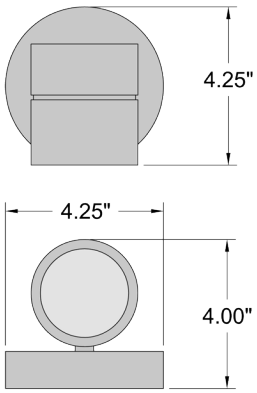

20350LEDDMGLP-BRZ/CLR
Bronze Finish

KO

20352MG-BRZ/CLR
Bronze Finish

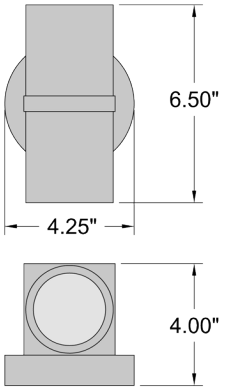

20352MG-SAT/CLR
Bi-Directional Outdoor Spotlight
Satin Finish
Clear Glass
4.25''W x 6.5''H x 4''Ext.
2 x 35 W GU-10 Halogen (Included)
520 Nominal Lumens
2900K, 120v
Dimmable
Wet Location
UL (US/Canada) Listed
ADA, Marine Grade

KO

20352LEDDMGLP-SAT/CLR
Satin Finish

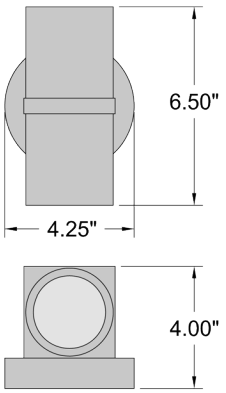

20352LEDDMGLP-BRZ/CLR
Bi-Directional Outdoor LED Spotlight
Bronze Finish
Clear Glass
4.25''W x 6.5''H x 4''Ext.
2 x 5.3 W GU-10 Replaceable LED (Included)
760 Nominal Lumens
3000K, 80 CRI, 120v
Dimmable
Wet Location
UL (US/Canada) Listed
ADA, Marine Grade, Title 20

20789LED-BL
Black Finish

20789LED-WH

Dual Voltage Adjustable LED Wall Mount
White Finish
Clear Glass
6.25''W x 7.25''H x 3-8''Ext.
1 x 30 W SSL Dedicated LED (Included)
2189 Delivered Lumens
4000K, 80 CRI, 120-277v
Wet Location
UL (US/Canada) Listed

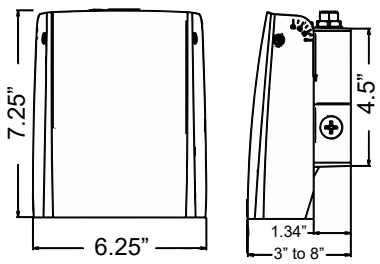

20789LED-BRZ
Bronze Finish

TORTUGA

TURTLE

TORTUGA

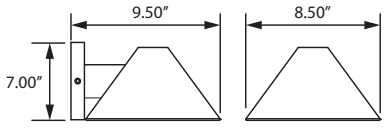

TL-20365LEDDMG-BRZ/FST

Outdoor LED Turtle Light Wall Mount

Bronze Finish
Frosted Glass
8.5''W x 7''H x 9.5''Ext.
1 x 24 W SSL Dedicated LED (Included)
1615 Delivered Lumens
587.9nm Wavelength, 120v
Wet Location
ETL (US/Canada) Listed
Dark Sky, Marine Grade

POSEIDON

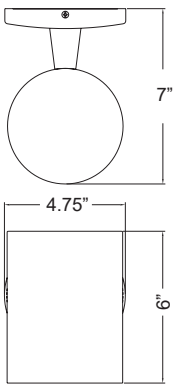

TL-20363LEDDLP-BL
Black Finish

TL-20363LEDDLP-BRZ
Bronze Finish

TL-20363LEDDLP-SAT

1 Light Outdoor LED Turtle Friendly Wall Mount
Satin Finish
4.75’’W x 6’’H x 7’’Ext.
1 x 3 W E-26 Replaceable LED (Included)
70 Nominal Lumens
Amber 598nm Wavelength, 120v
Wet Location
UL (US/Canada) Listed
Dark Sky

MATIRA

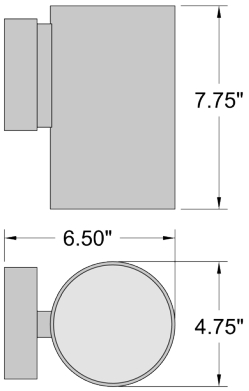

TL-20147LEDDMGLP-BL
Black Finish

TL-20147LEDDMGLP-SAT
1 Light Outdoor LED Turtle Friendly Wall Mount
Satin Finish
4.75''W x 7.75''H x 6.5''Ext.
1 x 3 W E-26 Replaceable LED (Included)
70 Nominal Lumens
Amber 598nm Wavelength, 120v
Wet Location
ETL (US/Canada) Listed
Dark Sky, Marine Grade, Title 20

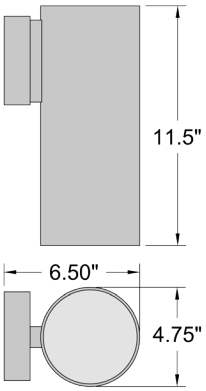

TL-20148LEDDMGLP-BL

1 Light Outdoor LED Turtle Friendly Wall Mount

Black Finish
4.75''W x 11.5''H x 6.5''Ext.
1 x 3 W E-26 Replaceable LED (Included)
70 Nominal Lumens
Amber 598nm Wavelength, 120v
Wet Location
ETL (US/Canada) Listed
Dark Sky, Marine Grade, Title 20

TL- 20148LEDDMGLP-SAT
Satin Finish

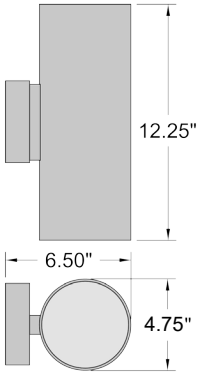

TL-20149LEDDMGLP-BL
Black Finish

TL-20149LEDDMGLP-SAT

2 Light Outdoor LED Turtle Friendly Wall Mount

Satin Finish
Frosted Glass
4.75''W x 12.25''H x 6.5''Ext.
2 x 3 W E-26 Replaceable LED (Included)
70 Nominal Lumens
Amber 598nm Wavelength, 120v
Wet Location
ETL (US/Canada) Listed
Marine Grade, Title 20

LUCID

MOTION SENSOR

LUCID
MOTION SENSOR

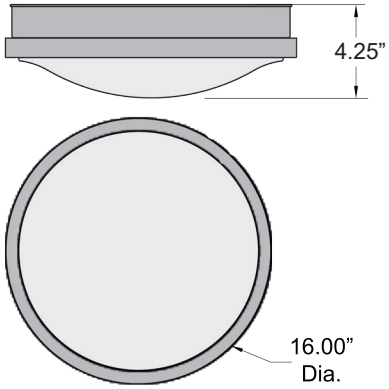

20799LEDMS-BS/ACR

Motion Sensor LED Flush Mount

Brushed Steel Finish
Acrylic Lens
16’’DIA. x 4.25’’H
1 x 23 W SSL Dedicated LED (Included)
1600 Delivered Lumens
3000K, 80 CRI, 120v
Damp Location
Daylight Sensor
On Time Adjustment: 15 sec, 30 sec, 1 min, 5 min
Detection Range Adjustment: 25’, 20’, 10’, 2’

20852LEDMS-WH/ACR

Motion Sensor LED Flush Mount

White Finish
Acrylic Lens
6.5''DIA. x .75''H
1 x 12 W SSL Dedicated LED (Included)
970 Delivered Lumens
3000K, 90 CRI, 120-277v
Damp Location
ETL (US/Canada) Listed
15 Foot Motion Detection Range
Day / Night Mode Switch

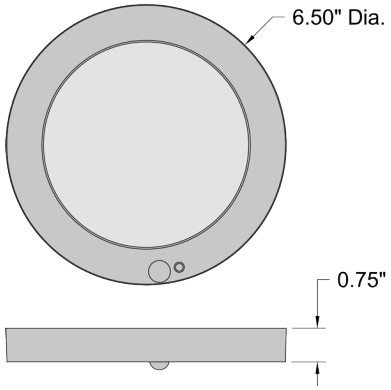

MODPLUS
MOTION SENSOR

20851LEDMS-WH/ACR

Motion Sensor LED Flush Mount

White Finish
Acrylic Lens
9''DIA. x 0.75''H
1 x 18 W SSL Dedicated LED (Included)
1266 Delivered Lumens
3000K, 85 CRI, 120v
Damp Location
ETL (US/Canada) Listed
15 Foot Motion Detection Range
Day / Night Mode Switch

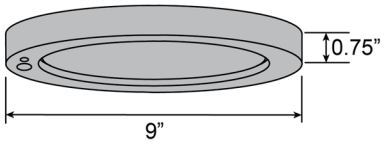

MODPLUS

EMERGENCY

MODPLUS

EMERGENCY BATTERY BACKUP

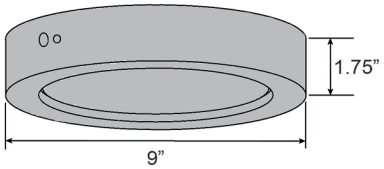

20850LEDEM-WH/ACR

Dual Voltage Emergency Backup LED Flush Mount

White Finish
Acrylic Lens
9’’DIA. x 1.75’’H
1 x 18 W SSL Dedicated LED (Included)
1243 Delivered Lumens
3000K, 90 CRI, 120/277v
Damp Location
ETL (US/Canada) Listed
Emergency Lighting
90 Minutes of Battery Life Minimum
on 24 Hour Battery Charge
Test Button and Charging Indicator
2 Branch Circuit Connections

20849LEDD-WH/ACR

LED Flush Mount

White Finish
Acrylic Lens
9''DIA. x 1.75''H
1 x 18 W SSL Dedicated LED (Included)
1073 Delivered Lumens
3000K, 90 CRI, 120v
Dimmable
Damp Location
ETL (US/Canada) Listed
JA8-2016/Title 24 Listed
Matches Height of Emergency Backup (20850LEDEM)

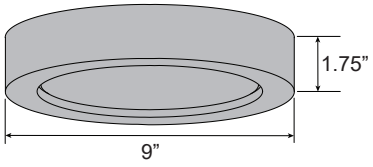

SOLERO

EMERGENCY BACKUP

20464LEDEM-BS/ACR
Brushed Steel Finish

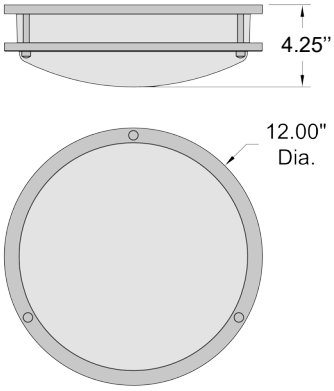

20464LEDEM-CH/ACR

Dual voltage Emergency Backup LED Flush Mount

Chrome Finish
Acrylic Lens
12''DIA. x 4.25''H
1 x 15 W SSL Dedicated LED (Included)
1011 Delivered Lumens
3000K, 90 CRI, 120-277v
Damp Location
ETL (US/Canada) Listed
Emergency Lighting
Test Button and Charging Indicator

SOLERO

EMERGENCY BACKUP

20465LEDEM-CH/ACR
Chrome Finish

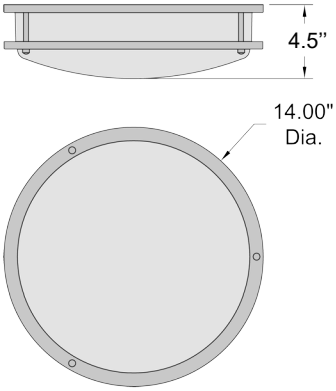

20465LEDEM-BS/ACR

Dual Voltage Emergency Backup LED Flush Mount

Brushed Steel Finish
Acrylic Lens
14''DIA. x 4.5''H
1 x 20 W SSL Dedicated LED (Included)
1320 Delivered Lumens
3000K, 90 CRI, 120-277v
Damp Location
ETL (US/Canada) Listed
Emergency Lighting
Test Button and Charging Indicator

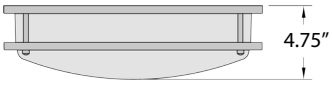

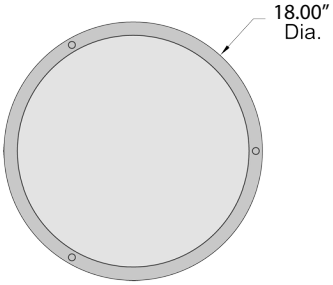

20466LEDEM-CH/ACR

Emergency Backup LED Flush Mount

Chrome Finish
Acrylic Lens
18''DIA. x 4.75''H
1 x 24 W SSL Dedicated LED (Included)
1510 Delivered Lumens
3000K, 90 CRI, 120v
Damp Location
ETL (US/Canada) Listed
Emergency Lighting
Test Button and Charging Indicator

20466LEDEM-BS/ACR
Brushed Steel Finish

EPIPHANIE

READING

BUNK

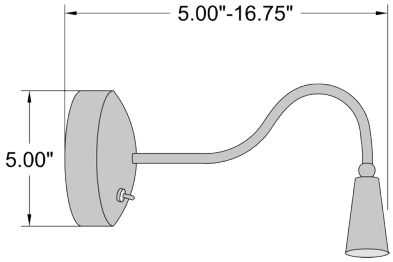

62089LED-BRZ

Gooseneck LED Wall Reading Light

Bronze Finish
5''DIA. x 16.75''H x 1.75''Ext.
1 x 1 W SSL Dedicated LED (Included)
65 Nominal Lumens
4700K, 80 CRI, 120v
Dry Location
UL (US/Canada) Listed
Optional Pin-up Parts (Cord and Plug) Included

62089LED-BS
Brushed Steel Finish

EPIPHANIE

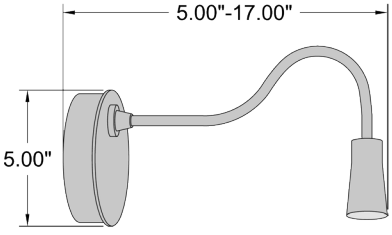

70003LED-BS
Brushed Steel Finish

70003LED-BRZ
Gooseneck LED Wall Reading Light
Bronze Finish
5''W x 17''H x 1.75''Ext. x 5''-17''OAH
1 x 3 W SSL Dedicated LED (Included)
165 Nominal Lumens
3500K, 85 CRI, 120v
Dry Location
ETL (US/Canada) Listed
Optional Pin-up Parts (Cord and Plug) Included

CYPRUS 2

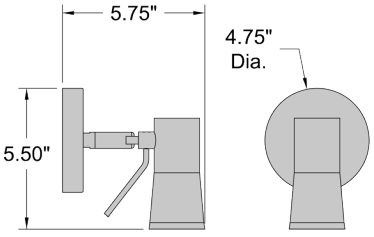

70018LED-BRZ

LED Wall Reading Light

Bronze Finish
4.75''DIA. x 5.75''Ext.
1 x 3 W SSL Dedicated LED (Included)
360 Nominal Lumens
3000K, 85 CRI, 120v
Dry Location
ETL (US/Canada) Listed
Optional Pin Up and 6 Feet of Cord Included

INTELED

UNDERCABINET

INTELED

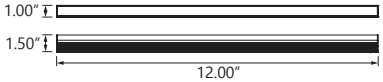

780LEDSTR-ALU

LED Undercabinet Light

Aluminum Finish
Acrylic Diffuser
12''L x 1''W x 1.5''H
1 x 5 W SSL Dedicated LED (Included)
350 Nominal Lumens
3000K, 85 CRI, 120v
Dimmable
Dry Location
ETL (US/Canada) Listed

Available:

780LEDSTR-ALU/4K
4000K

INTELED

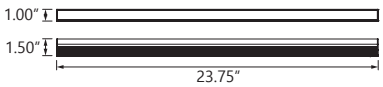

781LEDSTR-ALU

LED Undercabinet Light

Aluminum Finish
Acrylic Diffuser
23.75''L x 1''W x 1.5''H
1 x 10 W SSL Dedicated LED (Included)
700 Nominal Lumens
3000K, 85 CRI, 120v
Dimmable
Dry Location
ETL (US/Canada) Listed

Available:

781LEDSTR-ALU/4K
4000K

782LEDSTR-ALU

LED Undercabinet Light

Aluminum Finish
Acrylic Diffuser
39.5''L x 1''W x 1.5''H
1 x 14 W SSL Dedicated LED (Included)
1100 Nominal Lumens
3000K, 85 CRI, 120v
Dimmable
Dry Location
ETL (US/Canada) Listed

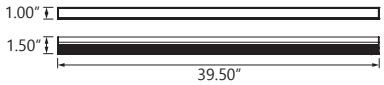

Available:

782LEDSTR-ALU/4K
4000K

INTELED

783LEDSTR-ALU

LED Undercabinet Light

Aluminum Finish
Acrylic Diffuser
47.5''L x 1''W x 1.5''H
1 x 18 W SSL Dedicated LED (Included)
1400 Nominal Lumens
3000K, 85 CRI, 120v
Dimmable
Dry Location
ETL (US/Canada) Listed

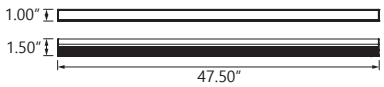

Available:

783LEDSTR-ALU/4K
4000K

784PWB-WHT
Wiring Box with Switch

792CON-WHT
6'' Flex Connector

793CON-WHT
9'' Flex Connector

787CON-WHT
12'' Flex Connector

788BCON
Butt Connector

789SPC-WHT
6' Power Cord with In-Line On/Off Switch

785PWC-WHT
3' Power Cord

786PWC-WHT
6' Power Cord

FINISH CODES

FIXTURE FINISHES

Code	Description
AB	Antique Brass
ABB	Antique Brushed Brass
ALU	Aluminum
BCH	Black Chrome
BCP	Brushed Copper
BG	Brushed Gold
BL	Black
BL/WGN	Black with Wood Grain
BRZ	Bronze
BS	Brushed Steel
CH	Chrome
GLD	Gold
GRY	Gray
MBL	Matte Black
MSS	Mirrored Stainless Steel
MWH	Matte White
ORB	Oil Rubbed Bronze
SAT	Satin
SBL	Shiny Black
SILV	Silver
WH	White
WH/WGN	White with Wood Grain

WH
White Finish

SAT
Satin Finish

MBL
Matte Black Finish

ABB
Antique Brushed Brass Finish

WH/WGN
White with Wood Grain Finish

GLASS FINISHES

Code	Description
ACR	Acrylic Diffuser
ALB	Alabaster
AMB	Amber
AMBFB	Amber Firebird
AMZ	Amazon
ASKY	Amber Sky
BRST	Brown Stone
CKF	Checkered Frosted
CLAM	Clear Amber
CLM	Metal Mesh in Clear Glass
CLOP	Clear Opal
CLR	Clear
CLRD	Clear Red
CLRUSKY	Clear Red Sky
COB	Cobalt
CP	Copper
CSL	Cream Silk Lined
FRC	Frosted Clear
FST	Frosted
ICA	Inca
LGR	Lime Green
MGL	Matte Gold
MIR	Mirror

WMB
Faux White Marble Glass

Code	Description
MYA	Maya
OPL	Opal
PLC	Purple Cloud
PLMFB	Plum Firebird
PLS	Purple Swirl
RED	Red
REDFB	Red Firebird
RFR	Ribbed Frosted
RRO	Red Ribbed Opaline
RUSKY	Red Sky
SACR	Starry Acrylic
SDG	Seeded Glass
WHST	White Stone
WHT	White
WHTFB	White Firebird
WMB	White Marble

INDEX

780LEDSTR-ALU 422
780LEDSTR-ALU/4K 422
781LEDSTR-ALU 422
781LEDSTR-ALU/4K 422
782LEDSTR-ALU 423
782LEDSTR-ALU/4K 423
783LEDSTR-ALU 423
783LEDSTR-ALU/4K 423
784PWB-WHT 424
785PWC-WHT 425
786PWC-WHT 425
787CON-WHT 425
788BCON 425
789SPC-WHT 425
792CON-WHT 425
793CON-WHT 425
20001LEDDMG-BRZ/SDG 344
20002LEDDMG-BRZ/SDG 344
20010LEDDMG-BL/RFR 353
20010LEDDMG-BRZ/RFR 353
20010LEDDMGLP-BL/RFR 353
20010LEDDMGLP-BRZ/RFR 353
20010LEDDMGLP-SAT/RFR 353
20010LEDDMGLP-WH/RFR 353
20010LEDDMG-SAT/RFR 353
20010LEDDMG-WH/RFR 353
20010MG-BL/RFR 352
20010MG-BRZ/RFR 352
20010MG-SAT/RFR 352
20010MG-WH/RFR 352
20011LEDDMG-BRZ/RFR 349
20011LEDDMGLP-BRZ/RFR 349
20011LEDDMGLP-SAT/RFR 349
20011LEDDMG-SAT/RFR 349
20011MG-BRZ/RFR 348
20011MG-SAT/RFR 348
20015LEDDMG-BRZ 322
20015LEDDMG-SAT 322
20016LEDDMG-BL 323
20016LEDDMG-SAT 323
20017LEDDMG-BL 322
20017LEDDMG-SAT 322
20018LEDDMG-BL 325
20018LEDDMG-SAT 325
20019LEDDMG-BL 324
20019LEDDMG-SAT 324
20030LEDDMG-BRZ/RFR 355
20030LEDDMGLP-BRZ/RFR 354
20030LEDDMGLP-SAT/RFR 354
20030LEDDMG-SAT/RFR 355
20030MG-BRZ/RFR 354
20030MG-SAT/RFR 354
20031LEDDMG-BRZ/RFR 351
20031LEDDMGLP-BRZ/RFR 350
20031LEDDMGLP-SAT/RFR 350
20031LEDDMG-SAT/RFR 351
20031MG-BRZ/RFR 350
20031MG-SAT/RFR 350
20032LEDMG-BRZ/FST 342
20032LEDMG-SAT/FST 342
20033LEDMG-BRZ/FST 343
20033LEDMG-SAT/FST 343
20034LEDMG-BRZ/FST 336
20034LEDMG-SAT/FST 336
20035LEDMG-BRZ/FST 337
20035LEDMG-SAT/FST 337
20036LEDMG-BRZ/FST 337
20036LEDMG-SAT/FST 337
20046LEDDMG-BL/FST 364
20046LEDDMG-BRZ/FST 364
20046LEDDMG-SAT/FST 364
20050LEDDMG-BL 326
20050LEDDMG-SAT 326
20060LEDDMG-BL/SDG 319
20060LEDDMG-SAT/SDG 319
20067LEDD-BS/OPL 356
20068LEDD-BS/OPL 356
20069LEDD-BS/OPL 357
20070LEDD-SILV/ACR 386
20070LEDD-WH/ACR 386
20071LEDD-BRZ/ACR 386
20071LEDD-SILV/ACR 386
20071LEDD-WH/ACR 386
20072LEDD-BRZ/ACR 387
20072LEDD-SILV/ACR 387
20072LEDD-WH/ACR 387
20075LEDD-BRZ/ACR 384
20075LEDD-SILV/ACR 384
20075LEDD-WH/ACR 384
20076LEDD-BRZ/ACR 385
20076LEDD-SILV/ACR 385
20076LEDD-WH/ACR 385
20080LED-BL/CLR 365
20081LED-BL/CLR 366
20082LED-BL/CLR 366
20083LED-BL/CLR 367
20084LED-BL/CLR 368
20086LEDD-BL/CLR 369
20100LEDDMG-BRZ/ACR 362

20100LEDDMG-SAT/ACR 362
20101LEDDMG-BRZ/ACR 363
20101LEDDMG-SAT/ACR 363
20105LEDMG-BRZ/ACR 358
20105LEDMG-SAT/ACR 358
20106LEDMG-BRZ/ACR 358
20106LEDMG-SAT/ACR 358
20107LEDMG-BRZ/ACR 359
20107LEDMG-SAT/ACR 359
20108LEDMG-BRZ/ACR 359
20108LEDMG-SAT/ACR 359
20110LEDDMG-BL/ACR 361
20110LEDDMG-SAT/ACR 361
20120LEDDMG-BL 332
20120LEDDMG-SAT 332
20121LEDDMG-BL 333
20121LEDDMG-SAT 333
20125LEDDMG-ORB/OPL 371
20126LEDDMG-ORB/OPL 371
20130LEDDMG-BL 318
20131LEDDMG-BL 318
20133LEDDMG-BL 320
20135LEDDMG-BL 321
20137LEDDMG-BL 321
20143LEDDMG-BL 320
20147LEDDMGLP-BL 334
20147LEDDMGLP-SAT 334
20148LEDDMGLP-BL 334
20148LEDDMGLP-SAT 334
20149LEDDMGLP-BL 335
20149LEDDMGLP-SAT 335
20260LEDDMG-BL/OPL 372
20260LEDDMG-SAT/OPL 372
20260LEDDMG-WH/OPL 372
20270LEDDMG-BL/OPL 373
20270LEDDMG-SAT/OPL 373
20270LEDDMG-WH/OPL 373
20280LEDDMG-BL/OPL 374
20280LEDDMG-SAT/OPL 374
20280LEDDMG-WH/OPL 374
20290-BL/FST 379
20290LEDDLP-BL/FST 379
20290LEDDLP-SAT/FST 379
20290LEDDLP-WH/FST 379
20290-SAT/FST 379
20290-WH/FST 379
20291-BL/FST 380
20291LEDDLP-BL/FST 380
20291LEDDLP-SAT/FST 380
20291LEDDLP-WH/FST 380
20291-SAT/FST 380
20291-WH/FST 380
20292-BL/FST 378
20292LEDDLP-BL/FST 378
20292LEDDLP-SAT/FST 378
20292LEDDLP-WH/FST 378
20292-SAT/FST 378
20292-WH/FST 378
20294-BL/FST 376
20294LEDDLP-BL/FST 376
20294LEDDLP-SAT/FST 376
20294LEDDLP-WH/FST 376
20294-SAT/FST 376
20294-WH/FST 376
20296-BL/FST 377
20296LEDDLP-BL/FST 377
20296LEDDLP-SAT/FST 377
20296LEDDLP-WH/FST 377
20296-SAT/FST 377
20296-WH/FST 377
20350LEDDMGLP-BRZ/CLR 393
20350LEDDMGLP-SAT/CLR 393
20350MG-BRZ/CLR 393
20350MG-SAT/CLR 393
20351LEDDMGLP-BRZ/CLR 392
20351LEDDMGLP-SAT/CLR 392
20352LEDDMGLP-BRZ/CLR 394
20352LEDDMGLP-SAT/CLR 394
20352MG-BRZ/CLR 394
20352MG-SAT/CLR 394
20356LEDDMGLP-MBL/FST 383
20356LEDDMGLP-SAT/FST 383
20362-BRZ/OPL 346
20362LEDDLP-BRZ/OPL 347
20362LEDDLP-SAT/OPL 347
20362-SAT/OPL 346
20363-BL 338
20363-BRZ 338
20363LEDDLP-BL 338
20363LEDDLP-BRZ 338
20363LEDDLP-SAT 338
20363-SAT 338
20364-BRZ/CLR 339
20364LEDDLP-BRZ/CLR 339
20364LEDDLP-SAT/CLR 339
20364-SAT/CLR 339
20375LEDMGLP-BRZ/FST 381
20375LEDMGLP-SAT/FST 381
20375MG-BRZ/FST 381

INDEX

20375MG-SAT/FST 381
20385LEDMGLP-BRZ/CLR 341
20385LEDMGLP-SAT/CLR 341
20385MG-BRZ/CLR 340
20385MG-SAT/CLR 340
20399LEDMG-BL 328
20399LEDMG-BRZ 328
20399LEDMGCNE-BL 331
20399LEDMGCNE-BRZ 331
20399LEDMGCNE-SAT 331
20399LEDMGCNE-WH 331
20399LEDMGRND-BL 329
20399LEDMGRND-BRZ 329
20399LEDMGRND-SAT 329
20399LEDMGRND-WH 329
20399LEDMG-SAT 328
20399LEDMG-WH 328
20408LEDD-BL 232
20408LEDD-SAT 232
20409LEDD-BL 232
20409LEDD-SAT 232
20415-ALB 260
20415LEDD-ALB 260
20415LEDD-OPL 260
20415-OPL 260
20416-BS/OPL 243
20416LEDD-BS/OPL 244
20416LEDDLP-BS/OPL 244
20416LEDDLP-MBL/OPL 244
20416LEDDLP-MBL/SDG 246
20416LEDD-MBL/OPL 244
20416-MBL/OPL 243
20417-BS/ALB 259
20417LEDDLP-BS/ALB 259
20417LEDDLP-ORB/ALB 259
20417-ORB/ALB 259
20419LEDDLP-BS/OPL 261
20420LEDDLP-SAT/OPL 242
20420LEDD-SAT/OPL 243
20420-SAT/OPL 242
20439-BRZ/OPL 250
20439-BS/OPL 250
20439LEDD-BRZ/OPL 251
20439LEDD-BS/OPL 251
20439LEDDLP-BRZ/OPL 250
20439LEDDLP-BS/OPL 250
20440-BRZ/OPL 248
20440-BS/OPL 248
20440LEDD-BRZ/OPL 249
20440LEDD-BS/OPL 249
20440LEDDLP-BRZ/OPL 249
20440LEDDLP-BS/OPL 249
20441-BS/OPL 264
20441LEDDLP-BS/OPL 264
20442-BS/OPL 265
20442LEDDLP-BS/OPL 265
20444-BRZ 270
20444LEDDLP-BRZ 271
20445-BS/OPL 263
20445LEDDLP-BS/OPL 263
20446-BS/WHT 254
20446LEDD-BS/WHT 255
20446LEDDLP-BS/WHT 255
20446LEDDLP-MBL/WH 255
20446LEDD-MBL/WHT 255
20446-MBL/WH 254
20447-BS/WHT 253
20447LEDD-BS/WHT 254
20447LEDDLP-BS/WHT 253
20447LEDDLP-MBL/WH 253
20447-MBL/WH 253,254
20450LEDDLP-OPL 382
20450-OPL 382
20464LEDEM-BS/ACR 412
20464LEDEM-CH/ACR 412
20465LEDEM-BS/ACR 412
20465LEDEM-CH/ACR 412
20466LEDEM-BS/ACR 413
20466LEDEM-CH/ACR 413
20467LEDD-BRZ/ACR 86
20467LEDD-BS/ACR 86
20468LEDD-BRZ/ACR 87
20468LEDD-BS/ACR 87
20468LEDD-CH/ACR 87
20469LEDD-BRZ/ACR 125,161
20469LEDD-BS/ACR 125,161
20470LEDD-BRZ/SACR 88
20470LEDD-BS/SACR 88
20470LEDD-CH/SACR 88
20471LEDD-BRZ/SACR 90
20471LEDD-BS/SACR 90
20471LEDD-CH/SACR 90
20472LEDD-BRZ/SACR 91
20472LEDD-BS/SACR 91
20472LEDD-CH/SACR 91
20494LEDD-BS/ACR 122
20494LEDD-ORB/ACR 122
20500LEDD-BRZ/ACR 80
20500LEDD-BS/ACR 80

20500LEDD-CH/ACR 80
20500LEDDCS-BS/ACR 84
20501LEDD-BRZ/ACR 81
20501LEDD-BS/ACR 81
20501LEDD-CH/ACR 81
20501LEDDCS-BS/ACR 85
20502LEDD-BRZ/ACR 82
20502LEDD-BS/ACR 82
20502LEDD-CH/ACR 82
20503LEDD-BRZ/ACR 83
20503LEDD-BS/ACR 83
20503LEDD-CH/ACR 83
20624-BS/OPL 96
20624LEDD-BS/OPL 97
20624LEDDLP-BS/OPL 96
20624LEDDLP-WH/OPL 96
20624LEDD-WH/OPL 97
20624-WH/OPL 96
20625-BS/OPL 98
20625LEDD-BS/OPL 99
20625LEDDLP-BS/OPL 98
20625LEDDLP-WH/OPL 98
20625LEDD-WH/OPL 99
20625-WH/OPL 98
20626-BS/OPL 99
20626LEDD-BS/OPL 100
20626LEDDLP-BS/OPL 100
20626LEDDLP-WH/OPL 100
20626LEDD-WH/OPL 100
20626-WH/OPL 99
20635LEDDLP-ORB/ALB 256
20635LEDDLP-SAT/ALB 256
20635LEDD-ORB/ALB 257
20635LEDD-SAT/ALB 257
20635-ORB/ALB 256
20635-SAT/ALB 256
20660-BS/OPL 258
20660LEDDLP-BS/OPL 258
20661-BS/OPL 106
20661LEDDLP-BS/OPL 106
20662-BS/OPL 107
20662LEDDLP-BS/OPL 107
20670-BS/OPL 68
20670-CH/OPL 68
20670LEDD-CH/OPL 69
20670LEDDLP-BS/OPL 68
20670LEDDLP-CH/OPL 68
20671-CH/OPL 70
20671LEDD-CH/OPL 71
20671LEDDLP-CH/OPL 71
20672-CH/OPL 72
20672LEDD-CH/OPL 73
20672LEDDLP-CH/OPL 72
20673-CH/OPL 138
20673LEDD-CH/OPL 139
20673LEDDLP-CH/OPL 138
20724-BS/OPL 101
20724LEDD-BS/OPL 102
20724LEDDLP-BS/OPL 102
20724LEDDLP-ORB/OPL 102
20724LEDD-ORB/OPL 102
20724-ORB/OPL 101
20725-BS/OPL 103
20725LEDD-BS/OPL 104
20725LEDDLP-BS/OPL 103
20725LEDDLP-ORB/OPL 103
20725LEDD-ORB/OPL 104
20725-ORB/OPL 103
20726-BS/OPL 104
20726LEDD-BS/OPL 105
20726LEDDLP-BS/OPL 105
20726LEDDLP-ORB/OPL 105
20726LEDD-ORB/OPL 105
20726-ORB/OPL 104
20738-BS/OPL 184
20738LEDDLP-BS/OPL 184
20739-BRZ/OPL 236
20739-BS/OPL 236
20739LEDD-BRZ/OPL 237
20739LEDD-BS/OPL 237
20739LEDDLP-BRZ/OPL 237
20739LEDDLP-BS/OPL 237
20780LEDD-WH/ACR 110
20789LED-BL 395
20789LED-BRZ 395
20789LED-WH 395
20791LEDD-SILV/ACR 388
20791LEDD-WH/ACR 388
20792LEDD-SILV/ACR 389
20792LEDD-WH/ACR 389
20794LEDD-BRZ/ACR 389
20799LEDMS-BS/ACR 108,406
20810LEDD-BRZ/ACR 94
20810LEDD-BS/ACR 94
20810LEDD-WH/ACR 94
20811LEDD-BRZ/ACR 95
20811LEDD-BS/ACR 95
20811LEDD-WH/ACR 95
20812LEDD-BRZ/ACR 95

INDEX

20812LEDD-BS/ACR 95
20812LEDD-WH/ACR 95
20813LEDD-BRZ/ACR 92
20813LEDD-BS/ACR 92
20813LEDD-WH/ACR 92
20814LEDD-BRZ/ACR 92
20814LEDD-BS/ACR 92
20814LEDD-WH/ACR 92
20815LEDD-BRZ/ACR 93
20815LEDD-BS/ACR 93
20815LEDD-WH/ACR 93
20820LEDD-BS/ACR 59
20821LEDD-BS/ACR 59
20830LEDD-BL/ACR 42
20830LEDD-BS/ACR 42
20830LEDD-CH/ACR 42
20830LEDDCS-BL/ACR 56
20830LEDDCS-BS/ACR 56
20830LEDDCS-CH/ACR 56
20830LEDDCS-WH/ACR 56
20830LEDD-WH/ACR 42
20831LEDD-BL/ACR 42
20831LEDD-BS/ACR 42
20831LEDD-CH/ACR 42
20831LEDDCS-BL/ACR 57
20831LEDDCS-BS/ACR 57
20831LEDDCS-CH/ACR 57
20831LEDDCS-WH/ACR 57
20831LEDD-WH/ACR 42
20832LEDD-BL/ACR 43
20832LEDD-BS/ACR 43
20832LEDD-CH/ACR 43
20832LEDDCS-BL/ACR 57
20832LEDDCS-BS/ACR 57
20832LEDDCS-CH/ACR 57
20832LEDDCS-WH/ACR 57
20832LEDD-WH/ACR 43
20834LEDD-BL/ACR 46
20834LEDD-BS/ACR 46
20834LEDD-CH/ACR 46
20834LEDD-WH/ACR 46
20835LEDD-BL/ACR 47
20835LEDD-BS/ACR 47
20835LEDD-CH/ACR 47
20835LEDD-WH/ACR 47
20836LEDD-BL/ACR 48
20836LEDD-BS/ACR 48
20836LEDD-CH/ACR 48
20836LEDD-WH/ACR 48
20837LEDD-BL/ACR 48
20837LEDD-BS/ACR 48
20837LEDD-CH/ACR 48
20837LEDD-WH/ACR 48
20838LEDD-BL/ACR 49
20838LEDD-BS/ACR 49
20838LEDD-CH/ACR 49
20838LEDD-WH/ACR 49
20840LEDD-BL/ACR 50
20840LEDD-BS/ACR 50
20840LEDD-CH/ACR 50
20840LEDD-WH/ACR 50
20841LEDD-BL/ACR 51
20841LEDD-BS/ACR 51
20841LEDD-CH/ACR 51
20841LEDD-WH/ACR 51
20848LEDD-WH/ACR 44
20849LEDD-WH/ACR 53,411
20850LEDEM-WH/ACR 52,410
20851LEDMS-WH/ACR 55,407
20852LEDMS-WH/ACR 54,407
20860LEDD-WH/ACR 45
20875LEDD-WH/ACR 111
23025LEDMGLP-BRZ/CLR 390
23025LEDMGLP-SILV/CLR 390
23025MG-BRZ/CLR 390
23025MG-SILV/CLR 390
23776LEDDLP-MBL/MGL 156
23776-MBL/MGL 156
23777-MBL/MGL 158
23778LEDDLP-MBL/MGL 157
23778-MBL/MGL 157
23890LEDDLP-GLD 163
23891LEDDLP-BL 162
23891LEDDLP-GLD 162
23892LEDDLP-BL 122
23892LEDDLP-GLD 122
23950-BS/OPL 146
23950LEDDLP-BS/OPL 147
23951-BS/OPL 147
23951LEDDLP-BS/OPL 148
23952-BS/OPL 148
23952LEDDLP-BS/OPL 149
24891LEDD-MBL/ACR 131
24891LEDD-MWH/ACR 131
24896LEDD-MBL/ACR 130
24896LEDD-MWH/ACR 130
28101-BCP/CP 154
28101LEDDLP-BCP/CP 154
28102-BCP/CP 155

28102LEDDLP-BCP/CP 155
29000LEDDLP-MBL 166
29000LEDDLP-MWH 166
29000LEDDLP-SAT 166
29001LEDDLP-MBL 166
29001LEDDLP-MWH 166
29001LEDDLP-SAT 166
29002LEDDLP-MBL 167
29002LEDDLP-MWH 167
29002LEDDLP-SAT 167
29010LEDDLP-BL/WMB 142
29011LEDDLP-BL/WMB 142
31000LEDD-BS/OPL 288
31001LEDD-BS/OPL 288
31002-BS/OPL 289
31002LEDD-BS/OPL 289
31003-BS/OPL 290
31003-CH/OPL 290
31003LEDD-BS/OPL 290
31003LEDD-CH/OPL 290
31007LEDD-BS/OPL 291
31010-BS/OPL 294
49950LEDD-BL/ACR 22
49951LEDD-BL/ACR 22
49952LEDD-BL/ACR 23
49960LEDD-BL/ACR 18
49960LEDD-SAT/ACR 18
49960LEDD-WH/ACR 18
49961LEDD-BL/ACR 19
49961LEDD-SAT/ACR 19
49961LEDD-WH/ACR 19
49962LEDD-BL/ACR 19
49962LEDD-SAT/ACR 19
49962LEDD-WH/ACR 19
49970LEDD-MBL/ACR 20
49971LEDD-MBL/ACR 20
49972LEDD-MBL/ACR 21
49980LEDD-BL/ACR 28
49980LEDD-SAT/ACR 28
49980LEDD-WH/ACR 28
49981LEDD-BL/ACR 28
49981LEDD-SAT/ACR 28
49981LEDD-WH/ACR 28
49982LEDD-BL/ACR 29
49982LEDD-SAT/ACR 29
49982LEDD-WH/ACR 29
49990LEDD-BL/ACR 24
49990LEDD-SAT/ACR 24
49990LEDD-WH/ACR 24
49991LEDD-BL/ACR 25
49991LEDD-SAT/ACR 25
49991LEDD-WH/ACR 25
49992LEDD-BL/ACR 25
49992LEDD-SAT/ACR 25
49992LEDD-WH/ACR 25
50004LEDD-BL/ACR 31
50004LEDD-WH/ACR 31
50005LEDD-BL/ACR 32
50005LEDD-WH/ACR 32
50006LEDD-BL/ACR 34
50006LEDD-WH/ACR 34
50007LEDD-BL/ACR 34
50007LEDD-WH/ACR 34
50009LEDD-BL/ACR 36
50009LEDD-WH/ACR 36
50011LEDD-BL/CLR 35,191
50011LEDD-WH/CLR 35,191
50030-BS/FST 60
50030LEDD-BS/FST 60
50031-BS/FST 61
50031LEDD-BS/FST 61
50032-BS/FST 62
50032LEDD-BS/FST 62
50036LEDD-BS/FST 63
50038LEDD-BS/FST 63
50079-BRZ/OPL 74
50079-BS/OPL 74
50079LEDD-BRZ/OPL 75
50079LEDD-BS/OPL 75
50079LEDDLP-BRZ/OPL 75
50079LEDDLP-BS/OPL 75
50080-BRZ/OPL 76
50080-BS/OPL 76
50080LEDD-BRZ/OPL 77
50080LEDD-BS/OPL 77
50080LEDDLP-BRZ/OPL 76
50080LEDDLP-BS/OPL 76
50081-BRZ/OPL 78
50081-BS/OPL 78
50081LEDD-BRZ/OPL 79
50081LEDD-BS/OPL 79
50081LEDDLP-BRZ/OPL 79
50081LEDDLP-BS/OPL 79
50120-BS/OPL 64
50120LEDD-BS/OPL 65
50120LEDDLP-BS/OPL 64
50121-BS/OPL 66
50121LEDD-BS/OPL 67
50121LEDDLP-BS/OPL 67

INDEX

50123-BS/OPL 140
50123LEDD-BS/OPL 141
50123LEDDLP-BS/OPL 141
50160LEDDLP-WH/OPL 109
50160-WH/OPL 109
50175-BS/OPL 269,302
50175LEDDLP-BS/OPL 269,302
50177-BS/OPL 303
50177LEDDLP-BS/OPL 303
50178-BS/OPL 304
50178LEDDLP-BS/OPL 304
50180-BS/OPL 144
50180LEDDLP-BS/OPL 144
50181-BS/OPL 145
50181LEDDLP-BS/OPL 145
50514-BS/FRC 179
50514LEDDLP-BS/FRC 179
50525-BS/CLM 180
50525LEDDLP-BS/CLM 180
50526-BS/CLM 181
50526LEDDLP-BS/CLM 181
50543-CH/CLOP 178
50543LEDDLP-CH/CLOP 178
50562-BS/OPL 268
50935-BCH/MIR 152
50935LEDDLP-BCH/MIR 152
50936-BCH/MIR 153
50936LEDDLP-BCH/MIR 153
50937-BL/CLR 150
50937LEDDLP-BL/CLR 150
50938-BL/CLR 151
50938LEDDLP-BL/CLR 151
50939LEDD-GRY/ACR 26
50939LEDD-WH/ACR 26
50940LEDD-GRY/ACR 134
50940LEDD-WH/ACR 134
50941LEDD-GRY/ACR 26
50941LEDD-WH/ACR 26
50942LEDD-GRY/ACR 134
50942LEDD-WH/ACR 134
52001LEDLP-BS 183
52030-BS/OPL 206
52030LEDDLP-BS/OPL 206
52031-BS/OPL 207
52031LEDDLP-BS/OPL 207
52042LEDDLP-BL 198
52042LEDDLP-BRZ 198
52042LEDDLP-BS 198
52043LEDDLP-BL 199
52043LEDDLP-BRZ 199
52043LEDDLP-BS 199
52057LEDDLP-BL/WGN 158
52057LEDDLP-WH/WGN 158
52070LEDDLP-BS 185
52103-BS 200
52103LEDDLP-BL 202
52103LEDDLP-BS 202
52180LEDD-MBL/ACR 40
52180LEDD-MWH/ACR 40
52181LEDD-MBL/ACR 231
52181LEDD-MWH/ACR 231
52203LEDDLP-BL 202
52204-BS 200
52204LEDDLP-BL 203
52204LEDDLP-BS 203
52205-BS 201
52205LEDDLP-BL 204
52205LEDDLP-BS 204
52206-BS 201
52206LEDDLP-BL 204
52206LEDDLP-BS 204
52220LEDDLP-BRZ 208
52220LEDDLP-BS 208
52221LEDDLP-BRZ 208
52221LEDDLP-BS 208
52222LEDDLP-BRZ 209
52222LEDDLP-BS 209
52223LEDDLP-BS 210
52224LEDDLP-BRZ 210
52224LEDDLP-BS 210
52226LEDDLP-BRZ 211
52226LEDDLP-BS 211
62042-BS/CKF 308
62042LED-BS/CKF 308
62043-BS/CKF 309
62043LEDD-BS/CKF 309
62052-CH/CKF 310
62052LED-CH/CKF 310
62053-CH/CKF 311
62053LEDD-CH/CKF 311
62089LED-BRZ 417
62089LED-BS 417
62160LEDD-MBL/ACR 228
62160LEDD-WH/ACR 228
62165-BRZ/FST 239
62165-BS/FST 239
62165LEDDLP-BRZ/FST 241
62165LEDDLP-BS/FST 241
62218LEDD-BS/OPL 238

62237LEDD-BL 235
62237LEDD-WH 235
62238LEDD-BL 235
62238LEDD-WH 235
62246LEDD-BRZ/ACR 229
62246LEDD-CH/ACR 229
62291LEDD-BRZ/OPL 262,305
62291LEDD-BS/OPL 262,305
62293LEDD-BRZ/OPL 306
62293LEDD-BS/OPL 306
62294LEDD-BRZ/OPL 306
62294LEDD-BS/OPL 306
62295LEDD-BRZ/OPL 307
62295LEDD-BS/OPL 307
62300LEDDLP-ABB 217
62300LEDDLP-MBL 217
62500LEDD-BS/ACR 292
62500LEDD-CH/ACR 292
62501LEDD-CH/ACR 293
62502LEDD-CH/ACR 293
62509LEDD-BS/CSL 268,300
62511LEDD-BS/CSL 300
62512LEDD-BS/CSL 301
62513LEDD-BS/ACR 284
62514LEDD-BS/ACR 284
62515LEDD-BS/ACR 285
62516LEDD-BS/ACR 286
62517LEDD-BS/ACR 287
62518LEDD-BS/ACR 287
62530LEDD-BG/OPL 280
62530LEDD-BS/OPL 280
62531LEDD-BG/OPL 280
62531LEDD-BS/OPL 280
62532LEDD-BG/OPL 281
62532LEDD-BS/OPL 281
62540LEDD-BG/OPL 282
62540LEDD-CH/OPL 282
62541LEDD-BG/OPL 283
62541LEDD-CH/OPL 283
62542LEDD-BG/OPL 283
62542LEDD-CH/OPL 283
62570LEDD-ABB/ACR 276
62570LEDD-BS/ACR 276
62570LEDD-MBL/ACR 276
62571LEDD-ABB/ACR 276
62571LEDD-BS/ACR 276
62571LEDD-MBL/ACR 276
62572LEDD-ABB/ACR 278
62572LEDD-BS/ACR 278
62572LEDD-MBL/ACR 278
62573LEDD-ABB/ACR 278
62573LEDD-BS/ACR 278
62573LEDD-MBL/ACR 278
62580LEDDLP-CH/OPL 266,298
62581LEDDLP-CH/OPL 298
62582LEDDLP-CH/OPL 299
62583LEDDLP-CH/OPL 299
62591LEDD-ABB/ACR 274
62591LEDD-BS/ACR 274
62591LEDD-MBL/ACR 274
62592LEDD-ABB/ACR 275
62592LEDD-BS/ACR 275
62592LEDD-MBL/ACR 275
62593LEDD-ABB/ACR 275
62593LEDD-BS/ACR 275
62593LEDD-MBL/ACR 275
63071LEDDLP-BS 195
63073LEDDLP-BS 196
63074LEDDLP-BS 197
63075LEDDLP-BS 197
63077LEDD-MBL/ACR 114
63077LEDD-MWH/ACR 114
63078LEDD-MBL/ACR 115
63078LEDD-MWH/ACR 115
63125LEDDLP-MSS/CLR 123
63126LEDDLP-MSS/CLR 175
63127LEDDLP-MSS/CLR 176
63128LEDDLP-MSS/CLR 174
63129LEDDLP-MSS/CLR 225,295
63130LEDDLP-MSS/CLR 295
63131LEDDLP-MSS/CLR 296
63140LEDD-ABB/CLR 168
63140LEDD-ABB/SDG 169
63140LEDD-BS/CLR 168
63140LEDD-BS/SDG 169
63140LEDD-MBL/CLR 168
63140LEDD-MBL/SDG 169
63141LEDD-ABB/CLR 170
63141LEDD-ABB/SDG 171
63141LEDD-BS/CLR 170
63141LEDD-BS/SDG 171
63141LEDD-MBL/CLR 170
63141LEDD-MBL/SDG 171
63142LEDD-ABB/CLR 172
63142LEDD-ABB/SDG 173
63142LEDD-BS/CLR 172
63142LEDD-BS/SDG 173
63142LEDD-MBL/CLR 172
63142LEDD-MBL/SDG 173

INDEX

63143LEDD-ABB/CLR 218
63143LEDD-ABB/SDG 219
63143LEDD-BS/CLR 218
63143LEDD-BS/SDG 219
63143LEDD-MBL/CLR 218
63143LEDD-MBL/SDG 219
63144LEDD-ABB/CLR 220
63144LEDD-ABB/SDG 221
63144LEDD-BS/CLR 220
63144LEDD-BS/SDG 221
63144LEDD-MBL/CLR 220
63144LEDD-MBL/SDG 221
63145LEDD-ABB/CLR 222
63145LEDD-ABB/SDG 223
63145LEDD-BS/CLR 222
63145LEDD-BS/SDG 223
63145LEDD-MBL/CLR 222
63145LEDD-MBL/SDG 223
63146LEDD-ABB/CLR 116
63146LEDD-ABB/SDG 117
63146LEDD-BS/CLR 116
63146LEDD-BS/SDG 117
63146LEDD-MBL/CLR 116
63146LEDD-MBL/SDG 117
63147LEDD-ABB/CLR 118
63147LEDD-ABB/SDG 119
63147LEDD-BS/CLR 118
63147LEDD-BS/SDG 119
63147LEDD-MBL/CLR 118
63147LEDD-MBL/SDG 119
63148LEDD-ABB/CLR 120
63148LEDD-ABB/SDG 121
63148LEDD-BS/CLR 120
63148LEDD-BS/SDG 121
63148LEDD-MBL/CLR 120
63148LEDD-MBL/SDG 121
63963LEDD-MBL/ACR 129
63963LEDD-MWH/ACR 129
63963LEDD-SILV/ACR 129
63964LEDD-MBL/ACR 129
63964LEDD-MWH/ACR 129
63964LEDD-SILV/ACR 129
63965LEDD-CH/ACR 133
63966LEDD-BL/ACR 38,214
63966LEDD-WH/ACR 38,214
63967LEDD-BL/ACR 38,214
63967LEDD-WH/ACR 38,214
63968LEDD-BL/ACR 133
63968LEDD-WH/ACR 133
63987-BCH/CLR 182
63987LEDDLP-BCH/CLR 182
64061LEDDLP-ABB/WH 226
64061LEDDLP-BS/WH 226
64062LEDDLP-ABB/WH 226
64062LEDDLP-BS/WH 226
64063LEDDLP-ABB/WH 58
64063LEDDLP-BS/WH 58
64064LEDDLP-ABB/WH 58
64064LEDDLP-BS/WH 58
64065LEDDLP-ABB/WH 124,136
64065LEDDLP-BS/WH 124,136
64066LEDDLP-ABB/WH 124,136
64066LEDDLP-BS/WH 124,136
70003LED-BRZ 418
70003LED-BS 418
70018LED-BRZ 419
71001LED-MIR 315
71005LED-MIR 314
71006LED-MIR 315
72010LEDDLP-ABB 164,192,193,216
72010LEDDLP-BRZ 164,192,193
72010LEDDLP-MBL 164,192,193,216
72010LEDDLP-MWH 164,192,193,216
SB-20020LED-BL/ACR 230
TL-20147LEDDMGLP-BL 400
TL-20147LEDDMGLP-SAT 400
TL-20148LEDDMGLP-BL 401
TL-20148LEDDMGLP-SAT 401
TL-20149LEDDMGLP-BL 402
TL-20149LEDDMGLP-SAT 402
TL-20363LEDDLP-BL 399
TL-20363LEDDLP-BRZ 399
TL-20363LEDDLP-SAT 399
TL-20365LEDDMG-BRZ/FST 398

Access Lighting believes that all information in this publication is correct at the time of printing, but is not responsible for accuracy of information published.
All information is subject to change without notice.

access
LIGHTING

HEADQUARTERS
14410 Myford Road
Irvine, CA 92606 | USA

TOLL FREE
800-828-5483

PHONE
714-247-1270

FAX
714-247-1351

WEBSITE
accesslighting.com

E-MAIL
info@accesslighting.com

DALLAS TRADE MART
2100 Stemmons Freeway
Suite 3939
Dallas, TX 75207 | USA

$15.00
©2021 All Rights Reserved
ZCATALOG-30