S&C

STEVEN AND CHRIS

INSTALLATION & ASSEMBLY INSTRUCTIONS
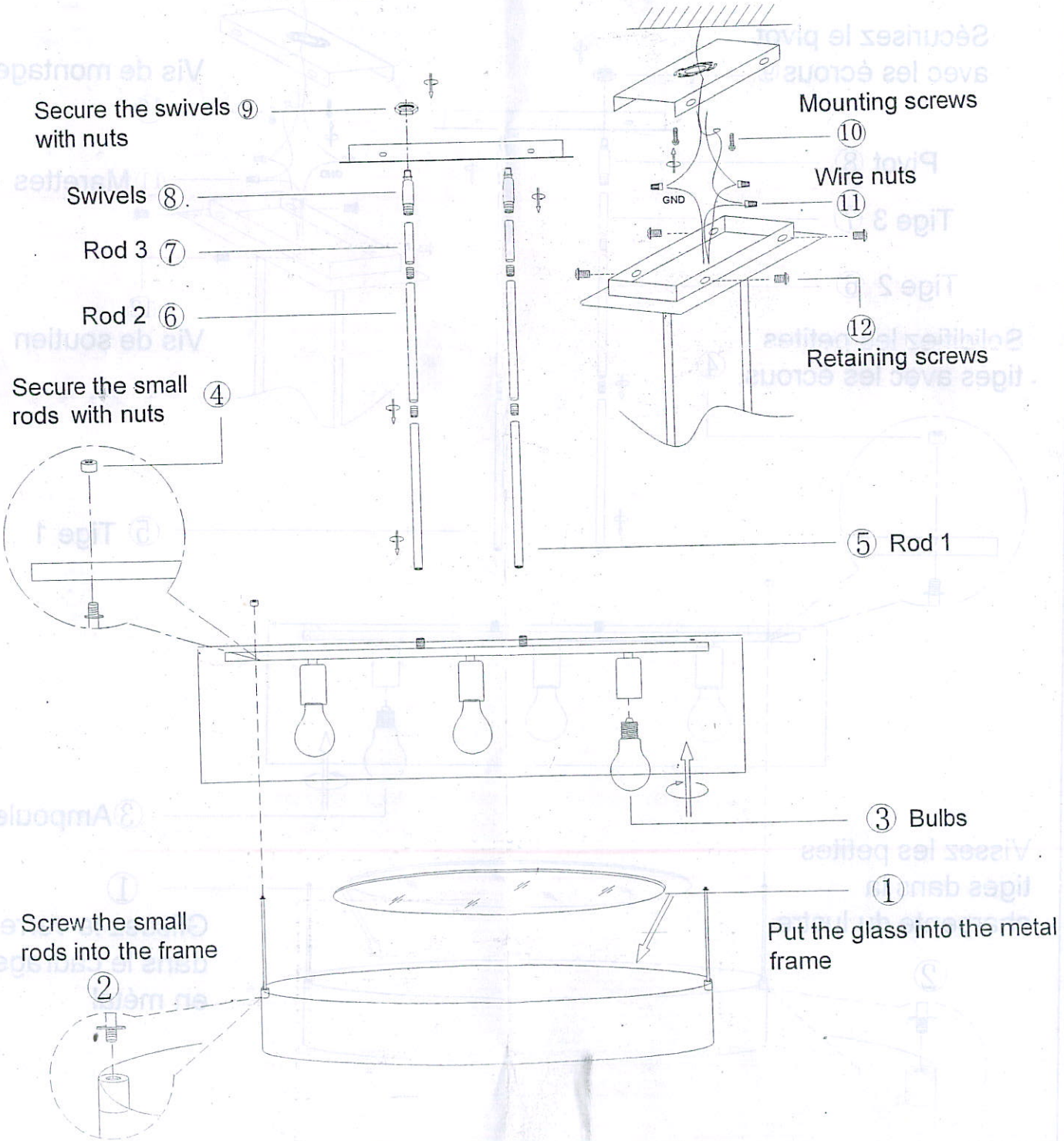
Item No.: SC784